Systematic Pedagogy in the Chemical Equilibrium Classroom

MAJ Melissa R. Eslinger
Department of Chemistry & Life Science
US Military Academy, West Point

March 11, 2008

Systematic Pedagogy in the Chemical Equilibrium Classroom

Table of Contents

Introduction	3
- Study Design	4
- Assessment Results	5
Interpretation, What It All Means	11
Summary	13
Recommended Approach to Education of Chemical Equilibrium	15
How to for instructors; A Step-Wise approach to teaching	20
-Getting to the equation	22
-Sample Presentation of Systematic Equilibrium Problem	24
VDNECK	
Equilibrium expression	29
Autoionization of water	30
Charge balance	
Mole/atom balance	
Handling Mathematica	31
Conclusion	33

Systematic Pedagogy in the Chemical Equilibrium Classroom

MAJ Melissa R. Eslinger
Department of Chemistry & Life Science
US Military Academy, West Point

J.H. Hildebrand in 1946 perhaps stated it best, "There seems to be no topic in freshman chemistry that presents more difficulties to students than chemical equilibrium. After trying for over 30 years to give clear answers to their questions, I have come to have a great deal of sympathy with them, realizing that the subject is inherently a difficult one." Chemical equilibrium continues to challenge even the most apt pupils. The test of utilizing an alternative methodology, the systematic approach, was worthy of exploring to demonstrate if cadets could focus their learning on the concepts in lieu of the traditional mathematical computations of small concentration and pressure values. The inherent question was, does instruction under the systematic approach aid conceptual understanding of the underlying chemistry? This study explored this question and the resulting data, based on cadet responses and scores, summarized if this approach enhanced understanding of equilibrium concepts, improved student perceptions about using technology to solve problems, and what this means to the teaching approach for instructors within the core general chemistry course.

The Department of Chemistry & Life Science goals include developing "in cadets: a firm foundation in physical science, investigative techniques, and problem solving skills essential to their understanding and awareness of the relationships between science and society." This extends to integrating technology and applications into the classroom. Utilizing a familiar tool, Mathematica, which cadets encounter early in their

mathematics curriculum, demonstrated that a technology can apply to various disciplines. We hypothesized that the systematic approach would allow instructors and cadets to focus on the chemistry, not the calculations, and provide cadets an improved understanding of the program due to their recent experience with Mathematica.

Study Design

During AY07, the systematic study group consisted on 238 cadets, all on 2-Days and in medium capability sections. The medium sections were chosen to attempt to match students across the course in capability. First year and senior instructors, 3-7 years of teaching experience, were all part of the study group. The control group contained 573 cadets within two subdivisions. The initial control group was the 1-Day sections of the study group instructors (201 cadets) and the second control group was from instructors teaching only the traditional reaction table approach, including 372 cadets.

Students were randomly assigned to sections. To verify that cadet ability was even among sections, average academic program scores (APSC), SAT scores, and previous semester CH101 scores were tabulated. They were, in fact, fairly equal based on previously demonstrated academic performance. Data in Table 1 illustrates the composite systematic study group (238 cadets) had an APSC of 2.81, SAT high of 1233, and CH101 average of 83.1 The study group with an internal control, teaching both reaction table & systematic method (201 cadets) had an APSC of 2.73, SAT high of 1248, and CH101 score of 82.5. Likewise, the randomly selected unaltered traditional reaction table control sections (372 cadets) had an APSC of 2.73, SAT high of 1252, and CH101 score of 82.3.

Table 1.

	# Cadets	APSC	SAT high	CH101 average
Study Group (SM)	238	2.81	1233	83.1
Control RT/SM	201	2.73	1248	82.5
Control RT only	372	2.73	1252	82.3

SM- cadets within sections taught in systematic method only
RT/SM- control cadets within sections taught by instructors also teaching reaction tables
RT- control cadets in sections taught by instructors only teaching reaction tables

Assessment of understanding chemical equilibrium concepts was accomplished through performance on the course-wide equilibrium quiz, a cadet survey on the use of technology, and a systematic cadet section survey that allowed for narrative responses. Also, instructor surveys were solicited for assessment purposes.

Assessment Results

Performance on the course-wide equilibrium quiz assessed three basic tenets of a system at equilibrium. These concepts are temperature is the only factor that alters the equilibrium constant value; all reactions occur simultaneously; and solutions are always charge neutral. Scores are reflected below.

Concept: Temperature is only factor affecting the value of K

Answer	**RT only Control**	**SM/RT**	**SM only**
Correct	66	38	49
Incorrect	314	180	209
% correct	17.4	17.4	19.0

Concept: All reactions occur simultaneously

Answer	**RT only Control**	**SM/RT**	**SM only**
Correct	83	50	73
Incorrect	290	146	155
% correct	22.3	25.5	32.0

Concept: Charge Neutrality of the solution

Answer	**RT only Control**	**SM/RT**	**SM only**
Correct	46	38	53
Incorrect	353	176	201
% correct	11.5	17.8	20.1

It is worthy to note that only temperature's effect on equilibrium was a learning objective. All three concepts equally apply to both reaction table and systematic method. The simultaneous reaction and charge neutrality are important concepts, but not specifically stated within the course for graded assessments. This equilibrium quiz was ungraded, not affecting course averages and was only for a current assessment. No grades were recorded and it was unannounced with no prior preparation allocated. There was also a time lag between this non-graded quiz; it was administered later in the semester and after the WPR.

The main graded cadet evaluations of equilibrium were Exam 1[a], Quiz 3[b], Exam 2[c], and Quiz 4[d]. Cadet performance on each evaluated concept is illustrated.

Problem Concept	**Table Group**		**Study Group**	
	Mean	**Std Dev**	**Mean**	**Std Dev**
Auto-ionization[a]	71.1	31.0	73.6	29.1
Dynamic equilibrium[a]	59.1	40.7	65.5	39.6
Salt Acidity[b]	84.5	26.5	84.6	27.4
Salt Acidity[c]	52.8	41.4	61.4	40.9
Multi-concept Strong/Weak[c]	74.9	24.9	73.7	23.7
Multi-concept Buffer[c]	64.5	39.7	60.7	39.7
Solubility[d]	66.4	26.4	69.1	24.5

To assess student perceptions about using technology to solve problems and equilibrium, a cadet survey compiled attitudes towards technology in the classroom and understanding of chemical equilibrium prior to and after instruction in the systematic method. Cadets were asked to respond to four main questions related to technology. Their scaled assessments, from one to five with 5 being the highest, are shown below.

Survey Question	**Initial Survey** (806 cadets)	**Final Survey Control--RT Group** (543 cadets)	**Final Survey--SM Study Group** (316 cadets)
I am knowledgeable about equilibrium concepts in acid-base chemistry.	2.6 ± 1.0	3.7 ± 0.7	3.7 ± 0.7
I am comfortable using computers in my academic classes.	3.6 ± 1.0	3.6 ± 1.0	3.8 ± 1.0
I use Mathmatica as a tool in solving problems outside of math class.	2.1 ± 1.2	1.8 ± 1.0	**2.7 ± 1.2**
The use of Mathematica is relevant outside of my math class.	2.3 ± 1.1	2.2 ± 1.1	**3.0 ± 1.1**

Bold indicates a statistically significant difference

The narrative survey distributed to cadets after the equilibrium block was interesting. The question asked that based on experience to the systematic method, which would be preferred as a teaching model, systematic or reaction table. Of 199 cadets who learned equilibrium using the systematic method, 128 cadets recommended the systematic method for next year's cadets and 71 cadets recommended the reaction table method. The top repeated responses are indicated along with their prevalence.

Recommend Systematic Method (128 surveys)		**Recommended Reaction Table (71 surveys)**
Systematic is easier once you get the hang of it (30)		Easier/fewer calculation (27) Easier to understand (18)
Faster to complete problems (16)		Mathematica not always available (11) or easy to understand (10)

Higher level understanding, applications to equilibrium & chemistry

Recommend Systematic Method (128 surveys)		**Recommended Reaction Table (71 surveys)**
Applies to a wide range of problems (13)		Mathematica not always available (11) or easy to understand (10)—also listed above
Logical/less memorization (12)		Have a better understanding of concepts (8)
Similar concepts repeated (11)		
Helped in math class (11)		

Comparing cadet responses to instructor responses, instructors were asked which method gave them a better conceptual understanding. First year instructors indicated that "systematics….what's going on in the beaker gave me a fuller understanding" of chemical equilibrium. On teaching both methods an instructor said, "reaction tables

helped me with reaction's derivation…Equilibrium, as a whole, I understood better using systematics." With traditional reaction tables, assumptions are used to simplify mathematical processes. Systematics takes everything in the system into account and the computer program of choice solves for the variables. A senior instructor noted, "Systematic—didn't have to make assumptions; accounted for all equilibrium reactions; solved for all equilibrium concentrations; more readily showed the similarity among equilibrium reactions." Also, another instructor stated, "I prefer systematic as every equilibrium process can be taken into account." Teaching using the systematic approach allows a "much better understanding of how reactions can couple together and influence each other….chronological view of how reactions happen."

Instructor concerns relative to lesson preparation were an issue, particularly for first year instructors. Teaching equilibrium is difficult in itself. Learning both reaction tables and systematics for first year instructors required much more time relative to peers teaching only reaction tables. Instructors were queried for technique comparison as to which method was easier to prepare for instruction. On a scale of 1 to 5, with five being the most difficult, results follow:

	Systematic	**Reaction Table**
Prep time required	5	2
Difficulty incorporating new material	4	2
Other	Graded events were particularly difficult.	Basic concepts covered.

However, even with the increased time requirements for lesson preparation, instructors were asked which technique would they prefer to use. Senior faculty continue to assert that systematics "requires cadets to learn the 'partial' nature of equilibrium..more robust…[portrays reaction realistically]…extends beyond assumptions…". Thus, the more complete approach, according to instructors, is to teach chemical equilibrium according to the systematic method.

Interpretation, What It All Means

First and foremost, was there any observed benefit from the systematic approach? Revisiting the main questions of this study: Does systematics enhance understanding of equilibrium concepts? Does systematics improve student perceptions about using technology to solve problems? What does this means to the teaching approach for instructors within the core general chemistry course?

The study groups and controls were matched by previous performance and course average in CH101. In each of the three concepts of equilibrium assessed on the quiz, there was not a remarkable difference between the control and study groups. As a general trend, the senior instructors who taught systematic approach alone tended to have a slightly higher percent correct in each category (pages 5-6). However, the differences were not great enough to draw a definitive conclusion as to whether quiz scores alone would account for specific equilibrium conceptual understanding. These similar grades are further supported by the same perceptions of acid base understanding in the cadet surveys (page 8).

Examining graded events, to encompass quizzes and exams, the results also do not support a great impact on improvement overall. Areas with slight score improvement based on the mean using systematics include auto-ionization (+2.5), dynamic equilibrium (+6.4), salt acidity (+8.6), and solubility (+2.7). Areas where the test cadets under-performed as compared to reaction table are multi-concept problems involving strong/weak acids/bases (-1.2) and multi-concept buffer (-3.8) problems. The logical conclusion, based upon grades alone, is that systematics does not greatly aid or hinder academic scores within chemical equilibrium. This was partially by design. The guidance from the Department Head of Chemistry & Life Science required that this study would neither advantage nor disadvantage a cadet receiving either method of instruction. Having similar course averages as an outcome ensure that this guidance was followed but make direct comparison of study groups scores difficult. Compared to the non-graded quiz, the statistically significant correlation of increased understanding of simultaneous reactions and charge neutrality were a benefit to the systematic study alone.

Breeching the obstacle of using technology for student learning via combining Mathematica with chemical equilibrium evidenced a statistically significant difference. Cadets in the systematic test group indicated their use of Mathematica as a problem solving tool outside of math class at a higher incidence after equilibrium instruction. While this was not a direct study goal, it does encourage the learning process and is an added benefit to the course goals. Likewise, their understanding that Mathematica can apply to disciplines outside math is beneficial to encourage cross-discipline approaches. While bringing technology to the classroom develops applications, it does not demonstrate a positive or negative correlation to equilibrium understanding.

Surveys were used to analyze both cadet and instructor experiences and conceptual understanding of equilibrium. Cadets indicated, via narratives, that they were able to complete complex problems quicker, a key benefit to the laboratory experiences. They also saw a wide range of benefits to systematically approaching a problem set, outside of equilibrium. However, reaction table students were just as satisfied with their understanding of their methodology. Differentiating the lower level understanding from higher level cadet responses, there were more responses indicative of a deeper understanding of concepts rather than ease of use or time requirements. Perhaps these comments are closer predictors of true understanding of chemical equilibria.

Instructors generally tend to support learning under the systematic approach. Perhaps due to their breadth of exposure to numerous cadets, they can determine and truly visualize how cadets learn in the classroom. Also, their own understanding tended to improve and expand over instructors that only teach reaction tables. Taking every species present initially and at equilibrium lends itself to a wide array of teaching topics. Focusing on the chemistry and math separately is a benefit. However, the program problem-solver of choice needs to be refined to alleviate syntax frustration. This is currently being addressed in a new troubleshooting guide.

Summary

To compile data into a simple summary is not an easy task. The main issues with the systematic method continue to be the use of Mathematica (or any problem solving technology) within the classroom. Cadets are nervous with the programs and syntax errors are a source of great frustration. A potential mitigation would be to provide syntax templates rather than require cadets to generate their own. Additionally, systematic

instruction requires much more initial preparation by faculty members. While this learning curve will equalize over time, a first year instructor could be potentially overwhelmed as they attempt, not only to develop teaching styles, but also tackle equilibrium while bridging a new approach to the pedagogy. This problem can resolve when the entire department focuses on teaching equilibrium in one method, rather than two concurrent methods.

The data collected from graded events, cadet surveys, and instructor feedback do not definitively support additional benefits gained from teaching chemical equilibrium via a systematic method. While minute areas can have a slight actual or perceived benefit over the reaction table methodology, it is not to an extent that would support a mass overhaul of the equilibrium pedagogy. Should an institution elect to pursue teaching via the systematic method, the follow-on text will discuss the particulars and provide insight into how an instructor can approach teaching chemical equilibrium. This step-wise approach is to further illustrate and serve to elucidate molecular action with a conceptual perspective.

Instructor Perspective & Recommended Approach to Education of Chemical Equilibrium

There are traditional methods for teaching chemical equilibrium, generally understood and accepted by the scientific community. However, the normal approach accepts some inherent flaws in order to simplify mathematical procedures and arrive at approximate answers. The Department of Chemistry & Life Science is in the second year of a cohort study where an alternative educational style is presented in select sections of the core course, general chemistry, CH102. The alternative approach to chemical equilibrium, the Systematic approach, is being compared to the traditional method, RIC/RICE in order to determine the most effective method to teach equilibrium and promote understanding of what occurs in solution at the molecular level. This brief overview will address the current teaching methods, the proposed systematic alternative, and observations regarding instruction in both.

As a first year instructor, with life science rather than chemistry background, chemical equilibrium first appeared challenging and somewhat daunting. Upon hearing of the systematic approach test, it initially appeared that this alternative would lead to a higher level understanding of all areas related to equilibrium. The study design is three tiered: first year instructors have two sections on 1-Days that learn the traditional approach while two sections on 2-Days have systematics. Preparing for two distinct 80 minutes classes each day was challenging. All problem sets were identical but the execution markedly different.

Looking at traditional RIC/RICE pedagogy, a brief explanation of equilibrium and the method is required. In order to obtain chemical equilibrium, the rate of the

formation of products is equal to the rate of formation of reactants. Likewise, the ratio of concentrations of products to reactants is constant, at a specific temperature. All life seeks to obtain chemical equilibrium and measuring or influencing conditions can maximize yield, important to industry, or achieve the necessary stasis to preserve life. RIC stands for **R**eaction, **I**nitial concentration, and **C**hange for a neutralization reaction. Here, an acid or base is neutralized to form their conjugate and water as products. RICE is similar in that the reactants are from the neutralization reaction (the conjugate plus water) and they form new products with either hydronium (H_3O^+) or hydroxide ion (OH^-). Students provide simplifying assumption to arrive at mathematical solutions and avoid quadratic equations. These numbers indicate the extent that products become reactants and vice versa. These assumptions state that the change in "x" lost from the reactants and gained by the products is negligible. Therefore, from the initial to equilibrium concentrations, the concentrations are approximately equal to the initial. This simplifies the math to one "x" variable that pertains to the gain of hydronium or hydroxide ions in solution. Validating the assumption with the 5% rule, shows that when the change in concentration from initial to equilibrium is less than 5% of the initial concentration, the mathematics can be simplified and x can be "assumed away".

In addition to assumptions being required, cadets often become interested in pattern recognition about what goes into these RIC/RICE tables and lose some of the conceptual perspective of what is occurring in the system. For AY07-02, another alternative includes having these cadets write all equations that solve for "x" rather than accept a reaction table as a solution. Each instructor conveys the concepts of chemical equilibrium or what is going on in solution. The extent of their understanding is currently

under review by the systematic committee. The main question is, do cadets understand what occurs at equilibrium and is there an alternate method to present the information that takes everything that is going into or happening in the system into account? This question has led to the introduction of the Systematic Approach to chemical equilibrium.

Systematics does not require the simplifying assumptions and looks at all species initially present (or input) and requires identification of all species, spectator or not, that exist at equilibrium. This is often the most challenging concept for all cadets. After identifying the species, variables are assigned to each component (i.e., $[H3O^+]$ = p; $[OH^-]$ = h; $[Na^+]$ = w; [HCN] = y; $[CN^-]$ = z, etc). Some values are known based on initial concentrations and thus the next step is to correlate known data with the established identification system. The number of remaining variables indicates the number of equations required to solve. There are three main categories of equations to select from and any combination can be used to isolate and solve variables.

The three categories of systematic equations include equilibrium expressions (acid/base dissociation, K_a or K_b, and the autoionization of water K_w), charge balance, and mole/atom balance. Cadets have their standard textbook in addition to a locally generated systematic handbook, which describes each area in detail, as well as provide an overview of chemical equilibrium concepts. The appeal of systematics is that once the equations are written, a mathematical solver is used to generate answers. Thus, this integrates technology with scientific applications at the fundamental levels. With traditional sections, each class presents another perspective on how to use the RICE tables and variations. Systematics performs the same procedures each time. The only difference is the input species and species present at equilibrium, which cadets must

determine. Stressing a system, according to Le Chatelier or a buffer, is also simplified since it only requires changing one variable's concentration rather than re-configuring a series of data tables. Generated equations were input into Mathematica for solving purposes. This program was selected since cadets are exposed to it early in their academic math coursework and all have access to the program on their issued laptops. However, any mathematical program would suit the purpose.

Now that the internal workings of the traditional and systematic approach have been presented, the focus shifts to which method contributes to a higher level understanding of equilibrium or "what is going on in the beaker?". Data for exam performance as well as cadet sensing sessions are scheduled for review at the end of AY07-02. From an instructor perspective, teaching both methods has led to a personal understanding that far exceeds that of teaching RIC/RICE alone. Being conceptually aware of charged species as well as spectator ions, which are typically ignored, and focusing on the equations are all strengthened through systematics. While the initial learning curve is steeper than RICE, the level of difficulty evens out in the course. The systematic approach is identical for all problems, such as buffers, titrations, and neutralizations. The focus is on accurately writing the equations of everything in solution. From here, the mathematical equations to isolate and solve variable are simple. Cadets can quickly write the equations that solve for species, once they pause and think of what is going into the beaker and what is floating around in solution. This goal is paramount in true appreciation of the chemistry involved.

Having taught both types of approach, the main benefit of systematics is that cadets exhibit an enhanced comprehension of accurately depicting all equations that

occur in the system. RIC/RICE students are more focused on writing the tables correctly and sometimes lose sight of the big picture and concepts. The drawback of the systematic approach is that the mathematical system selected, Mathematica, is somewhat challenging for syntax. Cadets become frustrated when they receive error messages and cannot arrive at a mathematical solution. On several occasions, cadets were instructed to write the equations that would solve for "x" but stopped prior to using their laptops to generate answers. There was a sense of relief when they realized that their equations and logic was sound. However, another potential drawback of systematics is that cadets write equations for everything that is input into the system. Reacting each species with water (or present solvents) produces an equation list but a few cadets do not understand the dissociation or neutralization concepts. They have some difficulty explaining the why of neutralization reactions, for example or identifying what is being neutralized. In a few cases cadets were just writing reactions for everything possible. With RIC/RICE, the equations are specific for each table. Selecting incorrect reactants lead to a worthless table when concerned with species neutralization and equilibrium processes. Mistaken reactions carry forward into flawed science, but partial credit.

A final area yet to be addressed is laboratory sessions. This is one specific case where the benefits of mathematica and systematics is apparent. Cadets, who complete their homework prior to lab and arrive with a detailed, functional, mathematica file, can quickly execute labs. Again, the benefit is changing one concentration or constant in their syntax generates a new solution. So long as all equations are written out (i.e., dilutions) rather than using separate calculators for intermediate values, the process is repetitive and simple. Likewise, students should also use equations rather than

intermediate rounded values since the math program may provide varied answers which they may or may not realize are close to approved solutions. After all, when the value is 9.3×10^{-7}, an answer of 4.2×10^{-6} is not that far off but it takes a keen instructor and cadet to recognize the similarities and the process rather than only focusing on the answer. With advance preparation, cadets can breeze through the potentially arduous calculations of acid-base chemistry. Reaction tables must be re-done each time concentrations change or dilution occur. Thus, with prior preparation, systematics has shown promise with lessening the calculation burdens with absorption data and buffers. In reality, those who opt to pursue careers in science and engineering will frequently rely on computational programs rather than paper and pencil in charts. This is an appropriate initiation for them.

How to for instructors; A Step-Wise approach to teaching

Having discussed the process in general, the focus will shift to a "How-to" approach for instructors. The following presents a recommended hybrid approach which combines systematic with RIC/RICE methodologies which was effective in teaching during AY07-02. Particular cases and application of this systematic hybrid will provide a sample template for educators to effectively present chemical equilibrium.

Inherent in RIC/RICE chart derivation, simplifying assumptions are made. These assumptions are to simplify the mathematics involved and avoid quadratic equations as long as the variation for the initial concentrations to the concentration at equilibrium is less than 5%. With the RIC/RICE approach, the presence of spectator ions and how ionic solutions get into the system is often glossed over. With systematic approach, all species are taken into account and dissociation reactions are considered when deriving what is

“going into the beaker” and “what is in the beaker at equilibrium”. The Systematic Handbook (Kalainoff) discusses the specifics of the systematic method. This reference should be available and can serve as a supplemental or stand-alone text for chemical equilibrium. For the purposes of this study, the following focuses on ways to instruct and present the material rather than reviewing how to derive and use the systematic approach. There are some steps learned through the traditional approach which will be maintained and incorporated into the systematic method.

The systematic approach has a few questions that need answered at the outset. 1) What species are initially present? What are the affiliated disassociation reactions? What are the spectator ions? 2) What is going into the beaker (use as a model for a system at equilibrium)? 3) What reactions will occur for species being introduced into the system (beaker)? 4) What species are present at equilibrium (in the beaker)? 5) What are the equations needed for the systematic solving methodology (equilibrium expression, autoionization of water, charge balance, and mole balance)? 6) Based on these equations, what are the known concentrations of the species? 7) Specify known concentrations and specific equations into mathematica or an appropriate problem solving program.

As one can see, the math is not the focal point and is not considered until all of the chemistry is explored. For clarity, a specific case will be presented to show a recommended approach to the problem.

Getting to the equations

One distinction that must be mentioned is the difference between reactions and equations. The chemistry occurs in chemical reactions. Therefore, reactions are the crux of the class and without knowing what is happing with the species present; the rest of the process is moot. Once the chemistry is resolved, then the equations, or the systematic interpretation of the species actions, become important.

An approach to arrive at the reactions is a hybrid from one RIC/RICE technique. Borrowing the VDNECK moniker, this will be a guide to examine the problem. The term **V**olume **D**ilution **N**eutralization **E**quilibrium **C**oncentration and **K** expression is a checklist for each problem. Not all areas are needed but it is a good approach to see if these steps need to occur before the problem can be completed. Cadets are comfortable with checklists and keeping this in mind will aid them in evaluating where to go in problems.

First, recognize what is going on in the system. What species are going "into the beaker" and what will be "present in the beaker at equilibrium". After identifying the species present, determine if dissociation will occur and if it is partial or complete. Then, react each species with water to see what is produced. Do not forget the autoionization of water is always occurring and must be accounted. Instructors are not limited to one or two reactions here but can write as many as needed. The key is to present the material in a similar manner each time to allow cadets the opportunity to see a consistent way to evaluate problems. This is prime opportunity to emphasize strong acid/base and even mention the extent of dissociation relative to K_a or K_b values. Instructors can have various equations be they K_a or K_b reactions and the beauty is that is does not matter

which they use as long as it corresponds to the acid or base dissociation reaction. Systematics allows the freedom to examine the entire system from various perspectives rather than being tied to one approach that must be continually re-written. Once the reactions are derived, the equations are next.

After writing all the chemical reactions, the species going into and present in the beaker need symbology. Assigning variables to each species happens after all the chemistry is examined. For example, $[H_3O^+] = p$ $[OH^-] = h$ and $[Na^+] = x$. Taking the reactions to equations is simple. First, one should always write an equilibrium expression (K_a or K_b). This is then followed by autoionization of water, charge balance (if needed) and mole/atom balance. Looking at the drawn beaker, writing in the concentrations if known or how to calculate them, one can quickly determine how many unknown species are present at equilibrium. Systematics solves for all species concurrently so the number of unknown concentrations or variables dictates how many equations are needed. Two unknowns require two equations, three need three, etc. For the first few classes, instructors should fully write out the chemical reactions prior to translating them into systematic variables. Once this is understood, then a simple conversion can be applied for equilibrium, autoionization, charge and mole/atom balance. Some cadets need to see this a few times and be prepared to explain this again the first time short-cuts are attempted.

Visual learners are greatly aided by seeing the beaker each time. At board work, cadets should draw and label their own beakers and get into the habit of being able to discuss what is happening with each species. Instructors can pause problems and walk through these basics at any time as a good review technique. Likewise, with titrations,

cadets become confused when a stock solution requires dilution prior or if a buffer is challenged with a new concentration of a substance. Drawing flasks and beakers being diluted or poured into one another are invaluable techniques to taking words and showing what is going on in easily depicted schematics. Otherwise, cadets will not understand how to approach the problem and the Volume and Dilution portion will be lost.

Sample Presentation of Systematic Equilibrium Problem

What is the pH of the neutralization reaction between 50.00 mL of 0.15 M HCOOH (aq) and 50.00 mL of 0.25 M KOH (aq)?

Titration problems encompass the majority of cases that will be presented in chemical equilibria. Thus, this sample titration problem will be examined for illustrative purposes.

First, draw the beaker and the initial species present. This will outline what is going on and aid in understanding what calculations are necessary.

$$HCOOH(aq) + H_2O(l) \longrightarrow HCOO^-(aq) + H_3O^+(aq)$$

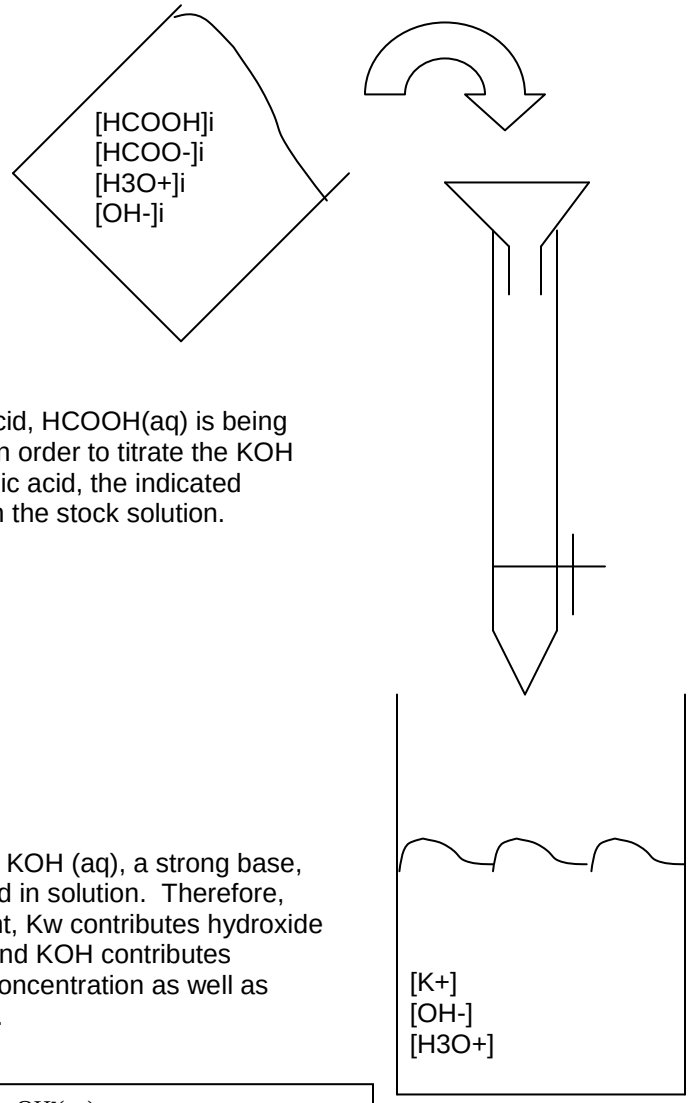

Titrant
A solution of formic acid, HCOOH(aq) is being added to the burette in order to titrate the KOH (aq) analyte. For formic acid, the indicated species are present in the stock solution.

Analyte
Initial conditions have KOH (aq), a strong base, completely dissociated in solution. Therefore, in an (aq) environment, Kw contributes hydroxide and hydronium ions and KOH contributes to the hydroxide ion concentration as well as adding potassium ion.

$$KOH(aq) \longrightarrow K^+(aq) + OH^-(aq)$$

Next, follow VDNECK to determine which steps are needed to proceed through the problem. If the situation does not apply, skip the step and go onto the next.

Volume Calculate the theoretical volume of titrant (formic acid) required to reach the equivalence point.

$$\frac{0.25\text{ mol KOH}}{\text{L}} \left| \frac{1\text{L}}{1000\text{mL}} \right| \frac{50.00\text{mL}}{} \left| \frac{1\text{mol } H_3O^+}{1\text{mol OH-}} \right| \frac{1\text{L}}{0.15\text{mol HCOOH}} \left| \frac{1000\text{mL}}{\text{L}} \right. = 83.3\text{mL}$$

Dilution When mixing the titrant and analyte, a new concentration of acid and base will result. Thus, the hydroxide concentration and formic acid concentration (partaking in the neutralization) must be calculated. (Calculations are shown here but recall that mathematica entries, for accuracy, will list the equations rather than solve for intermediate steps.)

OH- (0.25 M KOH)(50.00mL) = (M2)(50.00 + 83.3 mL) = 0.937 M OH-

HCOOH (0.15 M HCOOH)(50.00mL) = (M2)(50.00 + 83.3 mL) = 0.563 M HCOOH

Neutralization The hydroxide ion will neutralize the weak acid in solution. The chemical reaction of the species indicated is listed below. During this step, intermediate steps combine and instructors should discuss the concentrations and species present at equilibrium (draw and refer to the beaker again).

In this case, once the titrant is added to the analyte, species present at equilibrium will look like such:

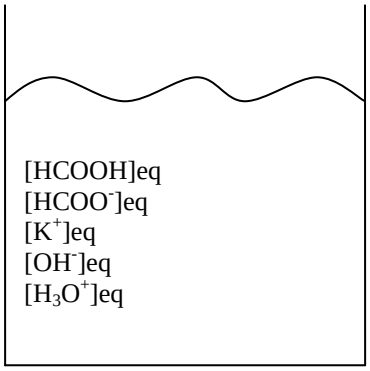

At equilibrium, concentrations of potassium, hydroxide, formate, and hydronium ions are present. Further, formic acid (partially dissociated) will be present as well.

From this point forward, all chemical reactions and derived systematic equations should come from this equilibrium beaker and species present at equilibrium.

Focusing on the neutralization reaction, the hydroxide will neutralize the weak acid and thus the reaction of interest is:

$$HCOOH(aq) + OH^-(aq) \longrightarrow HCOO^-(aq) + H_2O(l)$$

Note the unidirectional arrow and that the products of a neutralization reaction are always the conjugate and water.

Equilibrium Next, other reactions occurring at equilibrium can be discussed. Instructors can now discuss each species and its interaction. From the potassium's role as a spectator ion, because reacting with the hydroxide would form a strong base and it would immediately dissociate, there is no reaction to Ka and Kb values determining the extent of formic acid's dissociation, a large portion of the discussion can develop here.

Keep in mind that opposites attract, so join the positive and negative species, and remember the equilibrium arrow indicating that the forward rate equals the reverse rate. Referencing the equilibrium beaker again, one can develop an equation list such as:

$HCOOH(aq) + OH^-(aq) \longleftrightarrow HCOO^-(aq) + HO(l)$

$HCOO^-(aq) + H_3O^+(aq) \longleftrightarrow HCOOH(aq) + OH^-(aq)$

$H_3O^+(aq) + OH^-(aq) \longleftrightarrow 2H_2O(l)$

$K^+(aq) + OH^-(aq) \not\rightarrow KOH(aq)$ This does not occur, no reaction.

Concentration Thus far, no calculations have been completed. Only discussion has occurred and the derivation of equilibrium species and reactions. This step introduces the initial phase of converting to the systematic equations.

First, assign variables to each species, both initially and at equilibrium. These should be clearly defined and somewhat standard to avoid confusion when troubleshooting or on graded events.

$[HCOOH]i = xi$	$[HCOOH]eq = x$
$[HCOO^-]i = yi$	$[HCOO^-]eq = y$
$[K^+]i = zi$	$[K^+]eq = z$
	$[OH^-]eq = h$
	$[H_3O^+]eq = p$

The only difference between variable assignments at equilibrium and initially (prior to the reaction of interest) is the letter *i*. Clearly stating *eq* for equilibrium and *i* for initial will facilitate data entry. Spectator ions do not participate in the reaction so their initial concentrations will equal their equilibrium concentrations, or zi = z $\{[K^+]i = zi = [K^+]eq = z\}$.

At this phase, calculations will be associated with each variable. Take the initial formic acid concentration from the dilution step and the

$$[HCOOH]i = xi = (0.15\ M\ HCOOH)(50.00mL) = (M2)(50.00 + 83.3\ mL).$$

K Finally, writing equilibrium expressions will allow for bridging the chemistry concepts into mathematical forms. This will then become integrated into the mathematica syntax.

$[HCOOH]eq = x$
$[HCOO^-]eq = y$
$[K^+]eq = z = zi$ = known value
$[OH^-]eq = h$
$[H_3O^+]eq = p$

Since the spectator ion is a known value, there are four unknown variables (x,y, h, p). Thus, four unknowns require four equations to solve. These systematic equations will be:

Equilibrium expression

Instructors can write Ka or Kb, depending on which equilibrium reaction they desire to focus. Values for each are known and they will have already discussed each reaction.

$$HCOOH(aq) + OH^-(aq) \longleftrightarrow HCOO^-(aq) + H_2O(l)$$

$$Ka = 1.8 \times 10^{-4} = \frac{[HCOO^-]}{[HCOOH]\,[OH^-]} = \frac{y}{(x)(h)}$$

Systematically, this will appear as Ka = y / xh. Notice this is multiplication, not addition of the concentrations, a common cadet error.

Autoionization of Water

$Kw = 1.0 \times 10^{-14} = [OH^-][H_3O^+]$ or $1.0 \times 10^{-14} = (h)(p)$

Again, note that this is a multiplication rather than addition of the ion concentrations. As instructors proceed through these reactions and equations, encourage the fact that the reactions are occurring simultaneously but are presented in a step-wise fashion for clarity.

Charge balance

Remember that this must include at species present at equilibrium. Do not forget spectator ions.

$[HCOO^-]eq + [OH^-]eq = [K^+]eq + [H_3O^+]eq$ *or* $y + h = z + p$

Mole/atom balance

The key to the mole balance is to wisely select either a unique atom or a compound that appears in a few select species rather than each item. For example, balancing hydrogen atoms can happen, but will require much more effort than say balancing formate ions. Typically, is it easiest to select the conjugate for mole balancing.

Balancing formate ion will appear as:

$[HCOOH]i + [HCOO^-]i = [HCOOH]eq + [HCOO^-]eq$ or $xi + yi = x + y$

Cadets will soon recognize that the left side of the equation will match the right side with the exception of the *i* indicator. Do not allow them to gloss over and miss the meaning behind this step.

Handling Mathematica

Now that four unknown variables have four systematic equations, it is time to enter the mathematica syntax. Reinforce that the majority of the influence and course impact is based upon reaction derivation and set-up, not the systematic equations or final numbers. Syntax may vary depending on standard procedure. Keep in mind to clear the kernel before each problem, double equal signs are true equal signs, and spaces and capital letters have significance. Realize that curly brackets are used for listings while hard brackets are for commands such as solve. Mathematica takes practice and instructors should have working code for each problem prior to going into the classroom. Course directors have the discretion of making the syntax available for all cadets. Mathematica frustrations will occur due to simple syntax errors, expect it. One technique to overcome the burden of looking at 18 screens and trying to figure out why it will not work is to have the code projected on screen where cadets can look at it and enter it into their laptops. This serves multi purposes. They can see the best way to enter the information such as typing out all dilutions and concentration calculations, present a standard use of variables and format to simplify grading, and allow for the solution to be viewed. Frequently, cadets would go to boards in groups of two and work through the chemistry. Once instructors verify that the team has the correct chemistry and systematic equations, then they would be allowed to proceed to enter the syntax and obtain the

answer. Group work is invaluable as cadets can assist each other with understanding and each class has a few mathematica-talented folks. It also allows instructors to focus efforts on the one or two struggling groups. Once half of the class had verified board work and are inputting syntax, this is the appropriate time to project the solutions. Thus, cadets attempt to complete the process and enter syntax rather than copying. Soon, they will become adept at the process. Initially, expect to walk a few problems through the line-by-line syntax but after one class, this is unnecessary and becomes an AI issue. Again, the focus is on the chemistry, not the syntax and the grading will reflect this emphasis, which can be conveyed to the cadets in general terms.

For lab pre-briefs, instructors should recommend that each group arrive at lab with a functional mathematica file. This is a huge time saver and allows for multiple trials is the precision is off. Instructors, at the course director's discretion, can provide a template for lab so long as it does not answer the questions or perform the calculations for them. For example, all the {}, [], and clear commands are entered as well as variables defined and cadets must then input dilutions or K_a values and systematic equations. Labs are a vital bridge to illustrating the applicability of systematics as well as bridging science and technology. Therefore, instructors should bring lab references into the classroom prior to lab execution. "You will see a similar problem like this in Lab 6 when we examine Le Chatlier's Principle in a buffer system" is an example of a simple link to make for cadets between lab and class.

Conclusion

After instructing 76 cadets in over 40 classes of eighty minute blocks regarding equilibrium, the systematic approach is one that merits exploration by the scientific community. The results of this second year test are currently being compiled and are expected for release in the future. Based on these results, decisions will be made as to whether or not all cadets will receive systematic or traditional instruction in chemical equilibrium in the next school year. Last year, a few sections were selected as an efficacy pool and data supported further examination of the technique; grades were not markedly different for either method. This year, approximately 25% of the course was exposed to the technique, within medium and advanced sections. Instructors ranged from rotating first year and third year military faculty to PhD experienced levels. Each instructor taught both techniques to allow intra-instructor and cross-level comparison. After teaching both methods, it can be said that this has made all the conceptual difference. The results are not complete but the Systematic approach is one that should be incorporated, at a minimum, in advanced and elective level courses at all institutions.

References

Department of Chemistry & Life Science website. The Departmental Mission, retrieved on March 10, 2008 from http://www.dean.usma.edu/departments/chem/administrative/DepartmentMission.htm

Kalainoff, M. Systematic Method Handbook CH152/102 (AY07). Department of Chemistry & Life Science, United States Military Academy, West Point, New York. 2007.

Kalainoff, M. "Learning Equilibrium Using the Systematic Method" *Departmental Briefing*, Department of Chemistry & Life Science, United States Military Academy, May 2007.

Kalainoff, M., Kowalski, E., Lachance, R., Shannon, J., & Biaglow, A. "Learning Equilibrium Using the Systematic Method" *Qualitative and Quantitative Data for Learning Equilibrium by Traditional and Systematic Methods.* Talk presented to ICUC2, May 2007.

The Systematic Road Taken

Metered and modified according to
Robert Frost's
The Road Not Taken

Two methods diverged in a handbook,
And boldly I decided to try both
And be one instructor, long I stood
And looked at both as long as I could
Whilst seeing those teaching RICE already on the go;

Then I chose the other, as just as fair,
And having perhaps the better claim,
To increase equilibrium understanding;
What is really in the beaker,
Will this be a claim to fame?
Though as for that the passing there
To me, they are really about the same.

And all those extra evenings equally lay
In steps that cadets had trodden black.
Oh, I saved systematics for 2-days,
Yet knowing how way leads on to way,
I doubted if I should ever come back.

I shall be telling this with a sigh
Somewhere ages and ages hence:
Two teaching methods diverged in a text, and I--
I took the one less traveled by,
And that has made all the conceptual difference.

-- MAJ Melissa Eslinger
February 1, 2007