Problem Set 4
Linear Algebra
MA364, AY09-1
Due Beginning of Lesson 19
Show all work!

1. (8 pts) Kreyszig, p. 286, #12

2. (8 pts) Kreyszig, p.295, #12

3. (8 pts) Kreyszig, p.314, #14 (use definition and show work)

4. (8 pts) Kreyszig, p. 322, #4

5. (8 pts) Kreyszig, p.339, #14

6. (10 pts) Kreyszig, p. 343, #12

7. (25 Pts) A three tank system is set up as shown below:

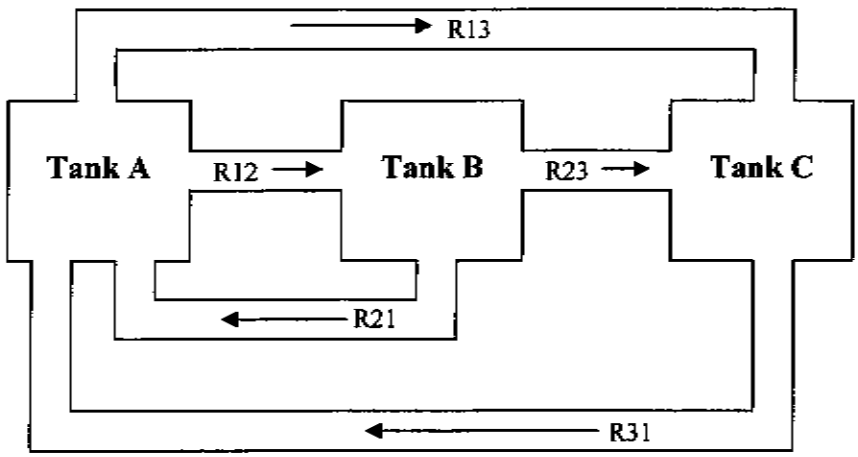

All three tanks contain 1000 gallons of water. At time $t = 0$, 25 lbs of a cleaning solvent is added to Tank A.

a. Model this system, be sure to define all your variables and state any assumptions that must be made.

b. Setup and solve for the eigenvalues and eigenvectors of this system, given the following flow rates:

R12	**50**
R13	**50**
R23	**50**
R21	**0**
R31	**100**

c. Using the eigenvalues and eigenvectors of the system and the given initial condition above, solve for the amount of solvent in tanks A, B, and C at any given time t.

d. Plot your solutions using Mathematica.

1. p. 286, #12

$$B = \begin{bmatrix} 9 & 4 & -4 \\ 4 & 7 & 0 \\ -4 & 0 & 11 \end{bmatrix}, \quad C = \begin{bmatrix} 3 & 1 \\ 0 & -2 \\ 4 & 0 \end{bmatrix}$$

Calculate the following products, sums, or give reasons why they are not defined. Show intermediate results.

$$B^3 = \underbrace{\begin{bmatrix} 9 & 4 & -4 \\ 4 & 7 & 0 \\ -4 & 0 & 11 \end{bmatrix} * \begin{bmatrix} 9 & 4 & -4 \\ 4 & 7 & 0 \\ -4 & 0 & 11 \end{bmatrix}}_{\begin{bmatrix} 81+16+16 & 36+28 & -36-44 \\ 36+28 & 16+49 & -16 \\ -36-44 & -16 & 16+121 \end{bmatrix} = \begin{bmatrix} 113 & 64 & -80 \\ 64 & 65 & -16 \\ -80 & -16 & 137 \end{bmatrix}} * \begin{bmatrix} 9 & 4 & -4 \\ 4 & 7 & 0 \\ -4 & 0 & 11 \end{bmatrix} = ①$$

$$① = \begin{bmatrix} 1593 & 900 & -1332 \\ 900 & 711 & -432 \\ -1332 & -432 & 1827 \end{bmatrix}$$

ANS

$BC = 3\times3 * 3\times2 \Rightarrow$ product is 3×2

$$\begin{bmatrix} 9 & 4 & -4 \\ 4 & 7 & 0 \\ -4 & 0 & 11 \end{bmatrix} \begin{bmatrix} 3 & 1 \\ 0 & -2 \\ 4 & 0 \end{bmatrix} = \begin{bmatrix} 27-16 & 9-8 \\ 12 & -10 \\ 32 & -4 \end{bmatrix} = \begin{bmatrix} 11 & 1 \\ 12 & -10 \\ 32 & -4 \end{bmatrix}$$

ANS

$(BC)^2$ is undefined (since we cannot multiply a $3\times2 + 3\times2$).

$$(BC)(BC)^T = 3\times2 \cdot 2\times3 \Rightarrow 3\times3 = \begin{pmatrix} 11 & 1 \\ 12 & -10 \\ 32 & -4 \end{pmatrix} \begin{pmatrix} 11 & 12 & 32 \\ 1 & -10 & -4 \end{pmatrix} = \begin{pmatrix} 122 & 122 & 348 \\ 122 & 244 & 424 \\ 348 & 424 & 1040 \end{pmatrix}_{3\times3}$$

ANS

#2 p. 295, #12

Solve the following system.

$$\left(\begin{array}{ccc|c} 0 & -2 & -2 & -8 \\ 3 & 4 & -5 & 13 \end{array}\right) \to \left(\begin{array}{ccc|c} 0 & 1 & 1 & 4 \\ 3 & 4 & -5 & 13 \end{array}\right) \to \left(\begin{array}{ccc|c} 0 & 1 & 1 & 4 \\ 3 & 0 & -9 & -3 \end{array}\right) \to$$

$$\left(\begin{array}{ccc|c} 0 & 1 & 1 & 4 \\ 1 & 0 & -3 & -1 \end{array}\right) \Rightarrow \begin{array}{l} x_2 = 4 - x_3 \\ x_1 = -1 + 3x_3 \end{array} \Rightarrow \text{infinitely many solutions}$$

$$\underline{\underline{\begin{pmatrix} x_1 \\ x_2 \\ x_3 \end{pmatrix} = \begin{pmatrix} -1 \\ 4 \\ 0 \end{pmatrix} + c_1 \begin{pmatrix} 3 \\ -1 \\ 1 \end{pmatrix}}} \text{ ANS}$$

#3 p. 314, #14

Find determinant: $\begin{vmatrix} 1 & -2 & 0 & 0 \\ 4 & 3 & 5 & 0 \\ 0 & 2 & 7 & 5 \\ 0 & 0 & 2 & 4 \end{vmatrix}$ let's choose to (expand about last row):

$$= (-1)^{4+1}(0)\begin{vmatrix} \ \end{vmatrix} + (-1)^{4+2}\, 0 \begin{vmatrix} \ \end{vmatrix} + (-1)^{4+3}(2)\begin{vmatrix} 1 & -2 & 0 \\ 4 & 3 & 0 \\ 0 & 2 & 5 \end{vmatrix} + (-1)^{4+4}(4)\begin{vmatrix} 1 & -2 & 0 \\ 4 & 3 & 5 \\ 0 & 2 & 7 \end{vmatrix}$$

$$= -2\begin{vmatrix} 1 & -2 & 0 \\ 4 & 3 & 0 \\ 0 & 2 & 5 \end{vmatrix} + 4\begin{vmatrix} 1 & -2 & 0 \\ 4 & 3 & 5 \\ 0 & 2 & 7 \end{vmatrix}$$ ← expand about this row

$11 + 2(28)$

$$\begin{array}{r} 67 \\ \times 4 \\ \hline 268 \\ -110 \\ \hline 158 \end{array}$$

$-2(15 + 2(20))$

expand about this column

$$= -2 * 5\begin{vmatrix} 1 & -2 \\ 4 & 3 \end{vmatrix} + 4 * \left(1\begin{vmatrix} 3 & 5 \\ 2 & 7 \end{vmatrix} + 2\begin{vmatrix} 4 & 5 \\ 0 & 7 \end{vmatrix}\right) = -110 + 4(11+56) = \underline{\underline{158}} \text{ ANS}$$

$3 + 8$

$-2 * 55$

-110

$$\begin{array}{r} 67 \\ \times 4 \\ \hline 268 \\ -110 \\ \hline 158 \end{array}$$

#4 Find the inverse by Gauss Jordan method.

$$\left[\begin{array}{ccc|ccc} 2/3 & 1/3 & 2/3 & 1 & 0 & 0 \\ -2/3 & \frac{2}{3} & \frac{1}{3} & 0 & 1 & 0 \\ \frac{1}{3} & \frac{2}{3} & -\frac{2}{3} & 0 & 0 & 1 \end{array}\right] \xrightarrow{3\times} \left[\begin{array}{ccc|ccc} 2 & 1 & 2 & 3 & 0 & 0 \\ -2 & 2 & 1 & 0 & 3 & 0 \\ 1 & 2 & -2 & 0 & 0 & 3 \end{array}\right] \xrightarrow{\text{Swap } R_3, R_1}$$

$$\underbrace{\begin{pmatrix} 2/3 & 1/3 & 2/3 \\ -2/3 & \frac{2}{3} & \frac{1}{3} \\ \frac{1}{3} & \frac{2}{3} & -\frac{2}{3} \end{pmatrix}}_{A}$$

$$\left(\begin{array}{ccc|ccc} 1 & 2 & -2 & 0 & 0 & 3 \\ -2 & 2 & 1 & 0 & 3 & 0 \\ 2 & 1 & 2 & 3 & 0 & 0 \end{array}\right) \xrightarrow[-2R_1+R_3]{2R_1+R_2} \left(\begin{array}{ccc|ccc} 1 & 2 & -2 & 0 & 0 & 3 \\ 0 & 6 & -3 & 0 & 3 & 6 \\ 0 & -3 & 6 & 3 & 0 & -6 \end{array}\right) \xrightarrow{2R_3+R_2}$$

$$\left(\begin{array}{ccc|ccc} 1 & 2 & -2 & 0 & 0 & 3 \\ 0 & 0 & 9 & 6 & 3 & -6 \\ 0 & -3 & 6 & 3 & 0 & -6 \end{array}\right) \xrightarrow{\text{Swap } R_2, R_3} \left(\begin{array}{ccc|ccc} 1 & 2 & -2 & 0 & 0 & 3 \\ 0 & -3 & 6 & 3 & 0 & -6 \\ 0 & 0 & 9 & 6 & 3 & -6 \end{array}\right) \xrightarrow[\frac{1}{9}R_3]{-\frac{1}{3}R_2}$$

$$\left(\begin{array}{ccc|ccc} 1 & 2 & -2 & 0 & 0 & 3 \\ 0 & 1 & -2 & -1 & 0 & 2 \\ 0 & 0 & 1 & \frac{2}{3} & \frac{1}{3} & -\frac{2}{3} \end{array}\right) \xrightarrow{2R_3+R_2} \left(\begin{array}{ccc|ccc} 1 & 2 & -2 & 0 & 0 & 3 \\ 0 & 1 & 0 & 1/3 & 2/3 & 2/3 \\ 0 & 0 & 1 & 2/3 & \frac{1}{3} & -2/3 \end{array}\right) \xrightarrow{-2R_2+R_1}$$

$$\left(\begin{array}{ccc|ccc} 1 & 0 & -2 & -2/3 & -4/3 & 5/3 \\ 0 & 1 & 0 & 1/3 & 2/3 & 2/3 \\ 0 & 0 & 1 & 2/3 & 1/3 & -2/3 \end{array}\right) \xrightarrow{2R_3+R_1} \left(\begin{array}{ccc|ccc} 1 & 0 & 0 & 2/3 & -2/3 & 1/3 \\ 0 & 1 & 0 & 1/3 & 2/3 & 2/3 \\ 0 & 0 & 1 & 2/3 & 1/3 & -2/3 \end{array}\right)$$

So the inverse of the given matrix, A, is $A^{-1} = \begin{pmatrix} 2/3 & -2/3 & 1/3 \\ 1/3 & 2/3 & 2/3 \\ 2/3 & 1/3 & -2/3 \end{pmatrix}$ Ans

verify $\begin{pmatrix} 2/3 & 1/3 & 2/3 \\ -2/3 & 2/3 & 1/3 \\ 1/3 & 2/3 & -2/3 \end{pmatrix} \cdot \begin{pmatrix} 2/3 & -2/3 & 1/3 \\ 1/3 & 2/3 & 2/3 \\ 2/3 & 1/3 & -2/3 \end{pmatrix} = \begin{pmatrix} 1 & 0 & 0 \\ 0 & 1 & 0 \\ 0 & 0 & 1 \end{pmatrix}$ ✓

#5 p. 339, #14

Find the eigenvalues, eigenvectors of

$$A = \begin{bmatrix} 2 & 0 & -2 \\ 0 & 0 & -2 \\ -2 & -2 & 1 \end{bmatrix}$$

We seek non-zero $\vec{v}$ and numbers λ such that $A\vec{v} = \lambda\vec{v}$. $\Rightarrow$

$$|A - \lambda I| = 0$$

$$\begin{vmatrix} 2-\lambda & 0 & -2 \\ 0 & -\lambda & -2 \\ -2 & -2 & 1-\lambda \end{vmatrix} = (2-\lambda)\begin{vmatrix} -\lambda & -2 \\ -2 & 1-\lambda \end{vmatrix} - 2\begin{vmatrix} 0 & -\lambda \\ -2 & -2 \end{vmatrix} = (2-\lambda)\left[(-\lambda)(1-\lambda)-4\right] + 4\lambda$$

$-2(0-2\lambda)$

$$\Rightarrow -\lambda^3 + 3\lambda^2 + 6\lambda - 8 = 0 \quad ; \text{ given } \lambda = 1$$

$$\Rightarrow -(\lambda-1)(\lambda^2 - 2\lambda - 8) = 0$$

$$-(\lambda-1)(\lambda-4)(\lambda+2) = 0 \Rightarrow$$

$\lambda - 4 \quad \lambda + 2$

$\lambda^2 - 4\lambda + 2\lambda - 8$

$\lambda^2 - 2\lambda - 8$

$$\underline{\underline{\lambda_1 = 1, \ \lambda_2 = 4, \ \lambda_3 = -2}} \text{ Ans}$$

from

$$\begin{bmatrix} 2-\lambda & 0 & -2 \\ 0 & -\lambda & -2 \\ -2 & -2 & 1-\lambda \end{bmatrix}\begin{bmatrix} v_1 \\ v_2 \\ v_3 \end{bmatrix} = \begin{bmatrix} 0 \\ 0 \\ 0 \end{bmatrix}$$

for $\underline{\underline{\lambda = 1}}$ $\Rightarrow \left(\begin{array}{ccc|c} 1 & 0 & -2 & 0 \\ 0 & -1 & -2 & 0 \\ -2 & -2 & 0 & 0 \end{array}\right) \rightarrow \left(\begin{array}{ccc|c} 1 & 0 & -2 & 0 \\ 0 & 1 & 2 & 0 \\ 0 & -2 & -4 & 0 \end{array}\right)$

$$\Rightarrow \begin{array}{l} v_1 = 2v_3 \\ v_2 = -2v_3 \end{array} \Rightarrow \underline{\underline{\vec{v}_1 = c_1\begin{pmatrix} 2 \\ -2 \\ 1 \end{pmatrix}}}$$

for $\lambda_2 = 4$

$$\left(\begin{array}{ccc|c} -2 & 0 & -2 & 0 \\ 0 & -4 & -2 & 0 \\ -2 & -2 & -3 & 0 \end{array}\right) \rightarrow \left(\begin{array}{ccc|c} +1 & 0 & +1 & 0 \\ 0 & 2 & 1 & 0 \\ -2 & -2 & -3 & 0 \end{array}\right) \rightarrow \left(\begin{array}{ccc|c} 1 & 0 & 1 & 0 \\ 0 & 2 & 1 & 0 \\ 0 & -2 & -1 & 0 \end{array}\right) \Rightarrow \begin{array}{l} x_1 = -x_3 \\ x_2 = -\frac{1}{2}x_3 \end{array}$$

$$\underline{\underline{\vec{v}_2 = c_2\begin{pmatrix} -2 \\ -1 \\ 2 \end{pmatrix}}}$$

for $\lambda_3 = -2$

$$\left(\begin{array}{ccc|c} 4 & 0 & -2 & 0 \\ 0 & 2 & -2 & 0 \\ -2 & -2 & 3 & 0 \end{array}\right) \rightarrow \left(\begin{array}{ccc|c} 2 & 0 & -1 & 0 \\ 0 & 1 & -1 & 0 \\ 0 & -2 & -2 & 0 \end{array}\right) \quad \begin{array}{l} 2x_1 = x_3 \\ x_2 = x_3 \end{array} \Rightarrow \underline{\underline{\vec{v}_3 = c_3\begin{pmatrix} 1/2 \\ 1 \\ 1 \end{pmatrix}}} \text{ Ans}$$

#6 p.343, #12

Given A in a deformation $\vec{y} = A\vec{x}$, find the principal direction and corresponding factors of extn/contraction.

$$A = \begin{bmatrix} 5 & 2 \\ 2 & 13 \end{bmatrix}$$

$$\begin{vmatrix} 5-\lambda & 2 \\ 2 & 13-\lambda \end{vmatrix} = (5-\lambda)(13-\lambda) - 4 = 0 \Rightarrow$$

$$\lambda^2 - 18\lambda + 61 = 0 \Rightarrow$$

$$\lambda_{1,2} = \frac{18 \pm \sqrt{18^2 - 4(61)}}{2} = \frac{18 \pm \sqrt{80}}{2} = 9 \pm 2\sqrt{5}$$

$$\lambda_1 = 9 + 2\sqrt{5} \Rightarrow \left(\begin{array}{cc|c} 5-(9+2\sqrt{5}) & 2 & 0 \\ 2 & 13-(9+2\sqrt{5}) & 0 \end{array}\right) \Rightarrow \left(\begin{array}{cc|c} -4-2\sqrt{5} & 2 & 0 \\ 2 & 4-2\sqrt{5} & 0 \end{array}\right) \Rightarrow$$

$-4-2\sqrt{5}\, x_1 = -2x_2$

$$\vec{v}_1 = c_1 \begin{pmatrix} 2 \\ 4+2\sqrt{5} \end{pmatrix}$$

$2+\sqrt{5}$

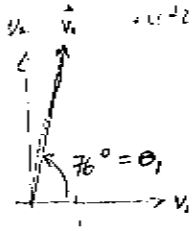

$$\lambda_1 = 9 + 2\sqrt{5} \approx 13.47$$

$$\lambda_2 = 9 - 2\sqrt{5} \Rightarrow \left(\begin{array}{cc|c} 5-(9-2\sqrt{5}) & 2 & 0 \\ 2 & 13-(9-2\sqrt{5}) & 0 \end{array}\right) \rightarrow \begin{array}{l} -4+2\sqrt{5}\, x_1 = -2x_2 \\ (2-\sqrt{5})x_1 = x_2 \end{array}$$

$=$

$$\vec{v}_2 = c_2 \begin{pmatrix} 1 \\ 2-\sqrt{5} \end{pmatrix}$$

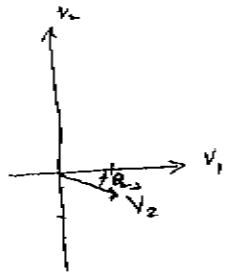

$$\theta_2 = \tan^{-1}\left(\frac{2-\sqrt{5}}{1}\right) = -13.28°$$

#7 3-tank system

Let $A(t) \equiv$ # lbs solvent in tank A at time t

$B(t) \equiv$ # lbs solvent in tank B

$C(t) \equiv$ # lbs solvent in tank C

$A(0) = 25, \quad B(0) = 0, \quad C(0) = 0$

$$A'(t) = -50 \frac{gal}{pd} * \frac{A\,lbs}{1000\,gal} + 0 \frac{gal}{pd} * \frac{B\,lbs}{1000\,gal} + 100 \frac{gal}{pd} * \frac{C\,lbs}{1000\,gal} - 50 \frac{gal}{pd} \frac{A\,lbs}{gal}$$

$$= -\frac{100}{1000} A + \frac{100}{1000} C = -.1A + .1C$$

$$B'(t) = 50 \frac{A}{1000} - 50 \frac{B}{1000} = .05A - .05B$$

$$C'(t) = 50 \frac{A}{1000} + 50 \frac{B}{1000} - 100 \frac{C}{1000} = .05A + .05B - .1C$$

$$\begin{bmatrix} A \\ B \\ C \end{bmatrix}' = \begin{bmatrix} -.1 & 0 & .1 \\ .05 & -.05 & 0 \\ .05 & .05 & -.1 \end{bmatrix} \begin{bmatrix} A \\ B \\ C \end{bmatrix} ; \quad \begin{bmatrix} A(0) \\ B(0) \\ C(0) \end{bmatrix} = \begin{bmatrix} 25 \\ 0 \\ 0 \end{bmatrix}.$$

$$\vec{X}'(t) = A \vec{x} ; \quad \vec{x}(0) = \vec{X}_0$$

Assume: $\vec{x}(t) = \vec{c} e^{\lambda t} \Rightarrow \lambda \vec{c} e^{\lambda t} = A \vec{c} e^{\lambda t} \Rightarrow$

$A\vec{c} = \lambda \vec{c}$! eigenvalue problem $\Rightarrow$ we seek non-zero $\vec{c}$, and numbers λ such that $A\vec{c} = \lambda \vec{c}$.

$$\Rightarrow \left| A - \lambda I \right| = 0 \Rightarrow \left| \begin{pmatrix} -.1-\lambda & 0 & .1 \\ +.05 & (-.05-\lambda) & 0 \\ .05 & .05 & (-.1-\lambda) \end{pmatrix} - \lambda \begin{pmatrix} 1 & 0 & 0 \\ 0 & 1 & 0 \\ 0 & 0 & 1 \end{pmatrix} \right| = 0$$

$$\Rightarrow (-.1-\lambda) \begin{vmatrix} -.05-\lambda & 0 \\ .05 & (-.1-\lambda) \end{vmatrix} + .1 \begin{vmatrix} .05 & -.05-\lambda \\ .05 & .05 \end{vmatrix} = 0 \Rightarrow$$

$$\lambda = 0, -.15, -.1 \Rightarrow \text{let } \underline{\underline{\lambda_1 = 0,\ \lambda_2 = -.15,\ \lambda_3 = -.1}}$$

For $\lambda_1 = 0$:

$$\left(\begin{array}{ccc|c} -.1 & 0 & .1 & 0 \\ .05 & -.05 & 0 & 0 \\ .05 & .05 & -.1 & 0 \end{array}\right) \rightarrow \left(\begin{array}{ccc|c} 1 & 0 & -1 & 0 \\ 1 & -1 & 0 & 0 \\ 1 & 1 & -2 & 0 \end{array}\right) \rightarrow \begin{array}{ccc|c} 1 & 0 & -1 & 0 \\ 0 & -1 & 1 & 0 \\ 0 & 1 & -1 & 0 \end{array}$$

$$\begin{array}{ccc|c} 1 & 0 & -1 & 0 \\ 0 & -1 & 1 & 0 \\ 0 & 0 & 0 & 0 \end{array} \Rightarrow \begin{array}{l} x_1 = x_3 \\ x_2 = x_3 \end{array} \Rightarrow \underline{\underline{\vec{V}_1 = c_1 \begin{pmatrix} 1 \\ 1 \\ 1 \end{pmatrix}}}$$

For $\lambda_2 = -.15$:

$$\left(\begin{array}{ccc|c} .05 & 0 & .1 & 0 \\ .05 & .1 & 0 & 0 \\ .05 & .05 & .05 & 0 \end{array}\right) \rightarrow \left(\begin{array}{ccc|c} 1 & 0 & 2 & 0 \\ 1 & 2 & 0 & 0 \\ 1 & 1 & 1 & 0 \end{array}\right) \rightarrow \begin{array}{ccc|c} 1 & 0 & 2 & 0 \\ 0 & 2 & -2 & 0 \\ 0 & 1 & -1 & 0 \end{array} \rightarrow$$

$$\begin{array}{l} x_1 = -2x_3 \\ x_2 = x_3 \end{array} \Rightarrow \vec{V}_2 = c_2 \begin{pmatrix} -2 \\ 1 \\ 1 \end{pmatrix}$$

For $\lambda_3 = -.1$:

$$\left(\begin{array}{ccc|c} 0 & 0 & .1 & 0 \\ .05 & .05 & 0 & 0 \\ .05 & .05 & 0 & 0 \end{array}\right) \Rightarrow \begin{array}{l} x_3 = 0 \\ x_2 = -x_1 \end{array} \Rightarrow \vec{V}_3 = c_3 \begin{pmatrix} 1 \\ -1 \\ 0 \end{pmatrix}$$

$$\therefore \quad \vec{X}(t) = c_1\begin{pmatrix}1\\1\\1\end{pmatrix}e^{0t} + c_2\begin{pmatrix}-2\\1\\1\end{pmatrix}e^{-.15t} + c_3\begin{pmatrix}1\\-1\\0\end{pmatrix}e^{-.1t}$$

$$\underline{\underline{\vec{X}(t) = c_1\begin{pmatrix}1\\1\\1\end{pmatrix} + c_2\begin{pmatrix}-2\\1\\1\end{pmatrix}e^{-.15t} + c_3\begin{pmatrix}1\\-1\\0\end{pmatrix}e^{-.1t}}}$$

$$\vec{X}(0) = \vec{X}_0 \Rightarrow \begin{pmatrix}25\\0\\0\end{pmatrix} = c_1\begin{pmatrix}1\\1\\1\end{pmatrix} + c_2\begin{pmatrix}-2\\1\\1\end{pmatrix} + c_3\begin{pmatrix}1\\-1\\0\end{pmatrix}$$

$$\Rightarrow \begin{pmatrix}c_1\\c_2\\c_3\end{pmatrix} = \begin{pmatrix}1 & -2 & 1\\1 & 1 & -1\\1 & 1 & 0\end{pmatrix}^{-1}\begin{pmatrix}25\\0\\0\end{pmatrix} =$$

$$= \begin{pmatrix}1/3 & 1/3 & 1/3\\-1/3 & -1/3 & 2/3\\0 & -1 & 1\end{pmatrix}\begin{pmatrix}25\\0\\0\end{pmatrix} = \begin{pmatrix}25/3\\-25/3\\0\end{pmatrix}$$

$$\therefore \quad \vec{X}(t) = \frac{25}{3}\begin{pmatrix}1\\1\\1\end{pmatrix} + -\frac{25}{3}\begin{pmatrix}-2\\1\\1\end{pmatrix}e^{-.15t}$$

$$\therefore \quad A(t) = \frac{25}{3} + \frac{50}{3}e^{-.15t}$$

$$B(t) = \frac{25}{3} - \frac{25}{3}e^{-.15t}$$

$$C(t) = \frac{25}{3} - \frac{25}{3}e^{-.15t}$$

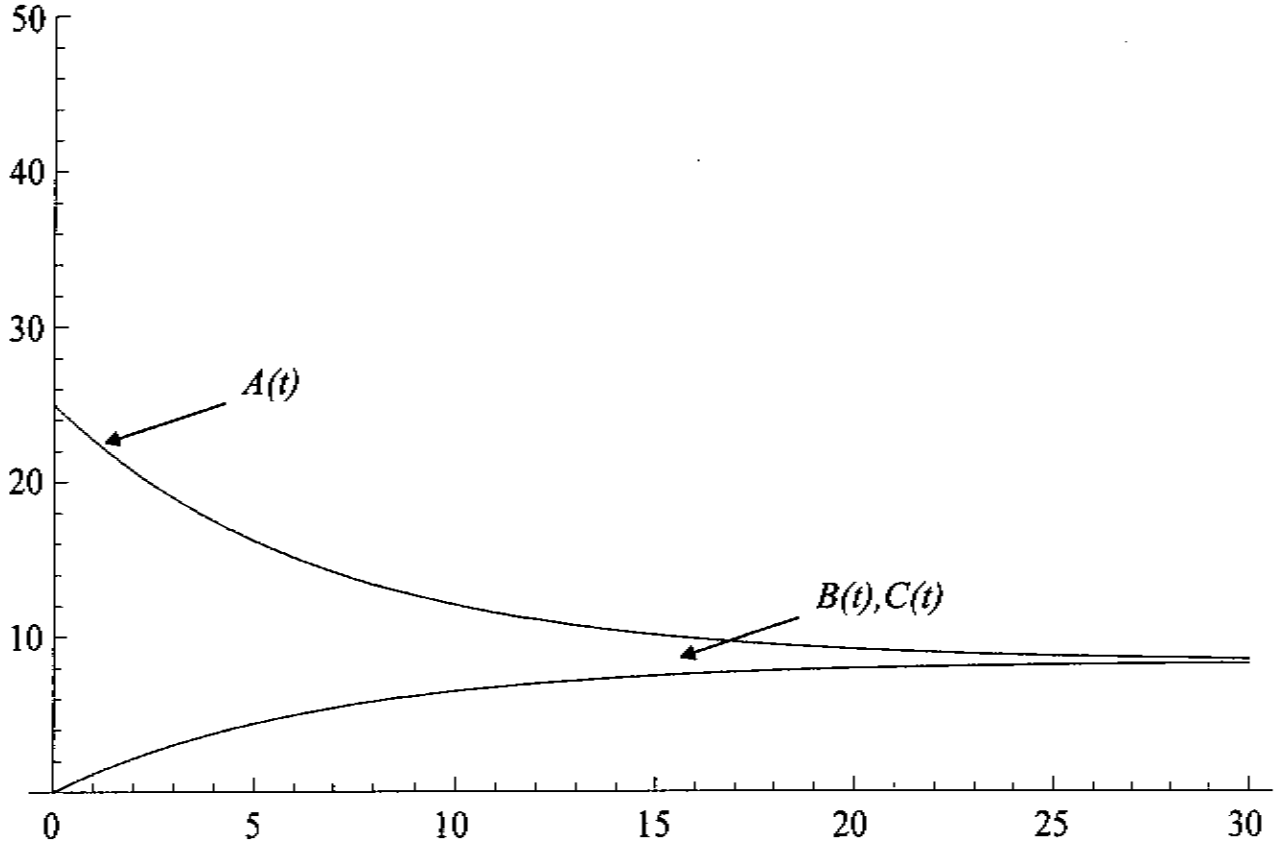
50
40
30
20
10
0
5
10
15
20
25
30
A(t)
B(t),C(t)