BASIC DEFINITIONS & THEORY FOR SPRING MASS SYSTEMS

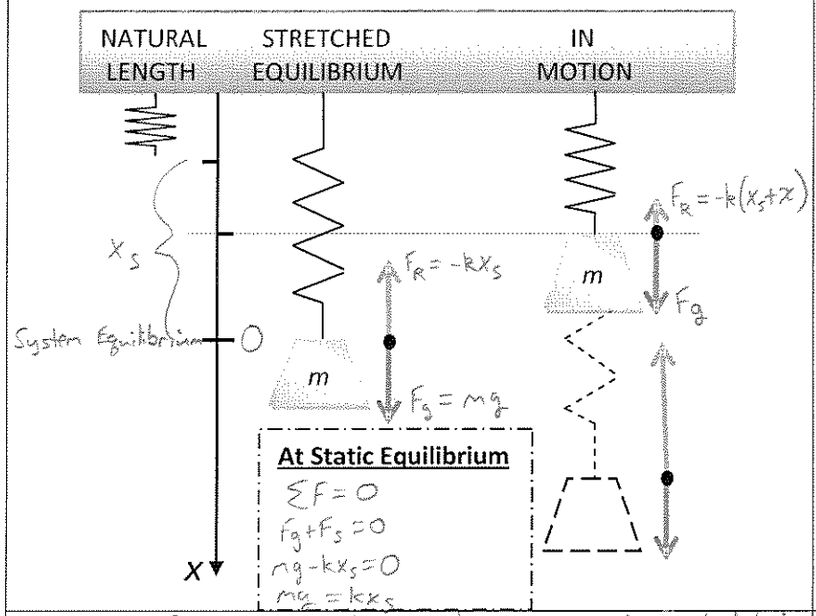

At Static Equilibrium

$\sum F = 0$

$F_g + F_s = 0$

$mg - kx_s = 0$

$mg = kx_s$

Hook's Law: force required to maintain a spring stretched x units beyond its natural length is proportional to x

$f(x) = kx$

x - displacement from system equilibrium at time t

k - positive spring constant

x_s - stretched length

Assumptions: No external resisting forces

Restoring Force:

$F_R = -kx$

Gravitational Force:

$F_g = mg \begin{cases} g = 9.8\ m/s^2 \\ g = 32\ ft/s^2 \end{cases}$

Newton's 2nd Law

$\sum F = ma$

$F_g + F_R = ma$

$mg - k(x_s + x) = mx''$

$\cancel{mg} - \cancel{kx_s} - kx = mx''$

$mx'' + kx = 0$

Auxiliary Eq.

$mr^2 + k = 0$

$mr^2 = -k$

$r^2 = -k/m$

$r = \pm\sqrt{-k/m}$

$r = \pm\sqrt{k/m}\, i$

$\alpha = 0,\ \beta = \sqrt{k/m}$

General Solution

$x(t) = C_1 \cos\left(\sqrt{k/m}\, t\right) + C_2 \sin\left(\sqrt{k/m}\, t\right)$ ANS

APPLIED PROBLEM (NO DAMPING)

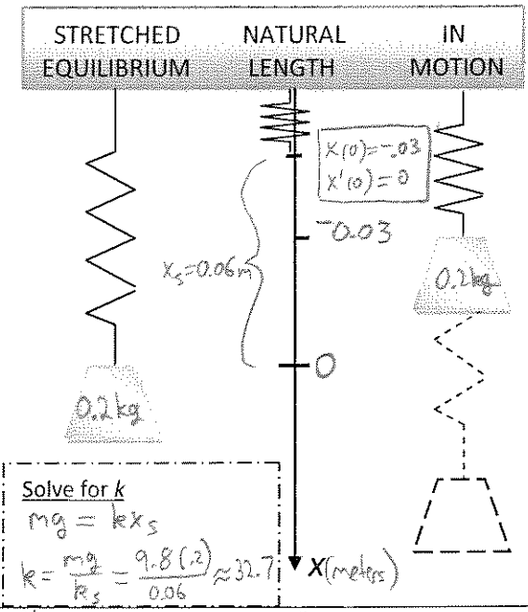

Solve for k

$mg = kx_s$

$k = \frac{mg}{x_s} = \frac{9.8(.2)}{0.06} \approx 32.7$

2nd Order DE: $0.2x'' + 32.7x = 0$

Auxiliary Equation: $0.2r^2 + 32.7 = 0$

Solve for roots (r): $r = \pm\sqrt{\frac{-32.7}{.02}} = \pm 12.8i$

General Solution: $x(t) = C_1 \cos(12.8t) + C_2 \sin(12.8t)$

$x'(t) = -12.8C_1 \sin(12.8t) + 12.8C_2 \cos(12.8t)$

Solve for C_1 and C_2:

$x(0) = -0.03 = C_1 \cos(0) + C_2 \sin(0)$

$-0.03 = C_1$

$x'(0) = 0 = -12.8C_1 \sin(0) + 12.8C_2 \cos(0)$

$0 = C_2$

Particular Solution: $x(t) = -0.03\cos(12.8t)$ ANS

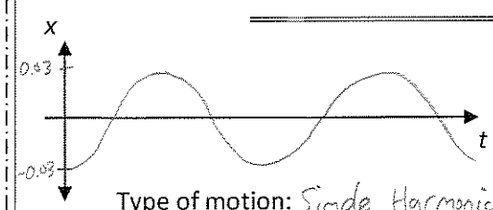

Type of motion: Simple Harmonic Motion

SPRING MASS SYSTEM WITH DAMPING FORCE

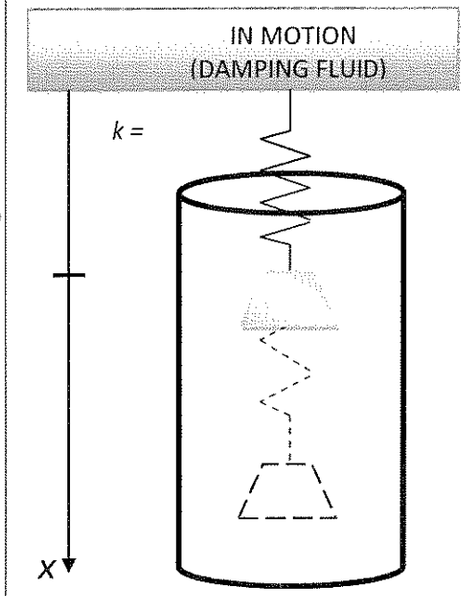

Damping Force: $F_d = -cx'$

Assume: damping force is proportional to velocity of mass and acts in negative direction

c - positive damping constant

Example: shock absorber

Newton's 2nd Law:

$\sum F = ma$

$F_R + F_d = ma$

$-kx - cx' = mx''$

2nd Order DE:

$mx'' + cx' + kx = 0$ ANS

Case I: $c^2 - 4mk > 0$

r_1, r_2 (real)

General Solution:

$x(t) = C_1 e^{r_1 t} + C_2 e^{r_2 t}$ ANS

Type of motion: Overdamping

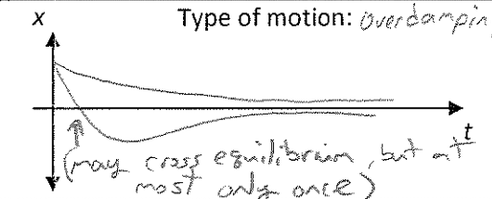

Case II: $c^2 - 4mk = 0$

$r_1 = r_2 = -\frac{c}{2m}$

General Solution:

$x(t) = (C_1 + C_2 t)e^{(-c/2m)t}$ ANS

Type of motion: Critical damping

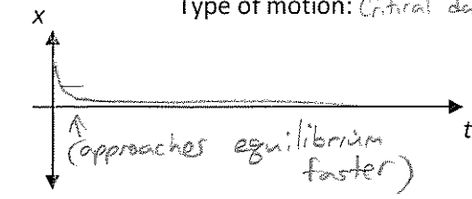

Case III: $c^2 - 4mk < 0$

$\alpha = -\frac{c}{2}m$

$r = \alpha \pm \beta i$

$\beta = \frac{\sqrt{4mk - c^2}}{2m}$

General Solution:

$x(t) = e^{-(c/2m)t}\left(C_1 \cos(\beta t) + C_2 \sin(\beta t)\right)$ ANS
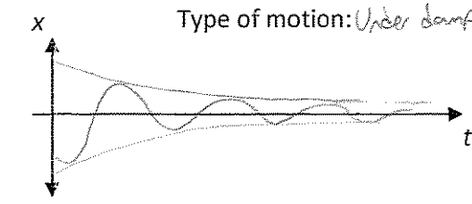
Type of motion: Under damping