Operational Verification of the VIMF

Dr. Christopher H. Conley
Cadet Richard A. Hutchison
Department of Civil and Mechanical Engineering
U.S. Military Academy, West Point, New York

Dr. Patrick Baker
Weapons & Materials Research Directorate
US Army Research Laboratory
Aberdeen Proving Ground, MD

1 Executive Summary

In this project an "as-built" CAD model of the Vertical Impulse Measurement Fixture (VIMF) was created. The CAD model formed the basis of numerical models for simulations of the VIMF's response. The initial simulations were used to help verify the operational readiness of the facility. This CAD model can also be used to generate "as-built" drawings that are commonly archived on large facilities.

The VIMF provides researchers with a facility for controlled testing of systems and subsystems subject to land mine blast. For example, the facility is currently being used to determine the response of basic vehicle hulls to mine blast. The facility is also well suited to characterizing the impulse generated by land mine detonation. As compared to air blast and underwater blast, very little data exists on the impulse generated by land mine blasts. This data is critical to performing realistic simulations that are needed in the development of new vehicle and system designs, as well as the design of retrofit schemes to enhance the survivability of existing systems.

2 Introduction

A short time spent reviewing the literature reveals the existence of a considerable database of information related to air blast and so called "UNDEX" or underwater explosions, but relatively little data regarding land mine detonation. This is not too surprising considering the relative quantity/value of equipment and personnel loss that typically result from a single bomb or underwater mine detonation versus the losses associated with a single land mine detonation. But the shear numbers of currently fielded land mines, their relative low cost and availability, and the desire for a lighter and more mobile Army makes land mine detonation a significant problem. The U.S. Department of State [1] recently estimated the number of land mines in the ground world-wide at 45-50 million, with a corresponding estimate of casualties resulting from land mines at about 10,000 annually. Other accounts of the injuries and loss of equipment resulting from land mines are readily found [2, 3, 9] including estimates that in excess of 50% of Army

vehicle losses are due to land mines. Considering the cumulative result of landmine detonation, this problem deserves increased attention.

The other factor that contributes to the lack of data regarding land mine detonation is the relative complexity of the problem. In air blast, there are two fundamental media, the explosive and air. In under water blast there are again two media, the explosive and water. In both of these cases, simulation of the detonation and the resulting transmission of energy is very complicated, and will be effected by changes in the character of the air or water. But in the case of land mine detonation it is even more complicated. There are typically several media involved; the explosive, the soil and the air between the ground surface and the vehicle. And the soil is typically a combination of solid particles of various sizes and densities, water and air. To appreciate the added difficulty in developing a statistically viable database of land mine generated impulses, simply consider the difficulty in accurately duplicating soil conditions between experiments, as compared to performing replicate tests in air or underwater.

Recognizing the magnitude and difficulty of the land mine issue, the Army Research Laboratory (ARL) at Aberdeen Proving Ground has developed the Vertical Impulse Measurement Fixture (VIMF). This facility has just recently come on line, with verification shots being conducted throughout the late spring and summer of 2003. The facility was designed for the development of a database of impulses resulting from land mines of various types and sizes with various depths of burial in various soil conditions. The facility is also well suited for the controlled testing of land mine resistant vehicle designs and retrofit strategies. As noted previously, the first project utilizing the VIMF is aimed at evaluating various vehicle hull designs.

3 VIMF Overview

The major components of the VIMF are shown in Figure 1. More details on these components are presented subsequently.

The "guiderail" is the major moving component, and is used to acquire data about the impulse generated by the land mine. The guiderail is "guided" in its flight by the "guidance housing." The guidance housing was designed to allow for both translation and rotation of the guiderail. The rest of the structure supports the guidance housing. Reports on the construction and operation of the VIMF are currently being written by ARL personnel.

Beneath the guiderail, a constructed soil pit facilitates the changing out of the soil for investigations into the effect of soil type and condition on the generated impulse. Between tests using the same soil type, disturbed soil is dug out and replaced with material matching the original soil conditions. Experts in buried explosives testing at the U.S. Army Corps of Engineers (USACE) Engineer and Research Development Center (ERDC) were consulted regarding soil type, placement, replacement and instrumentation [4].

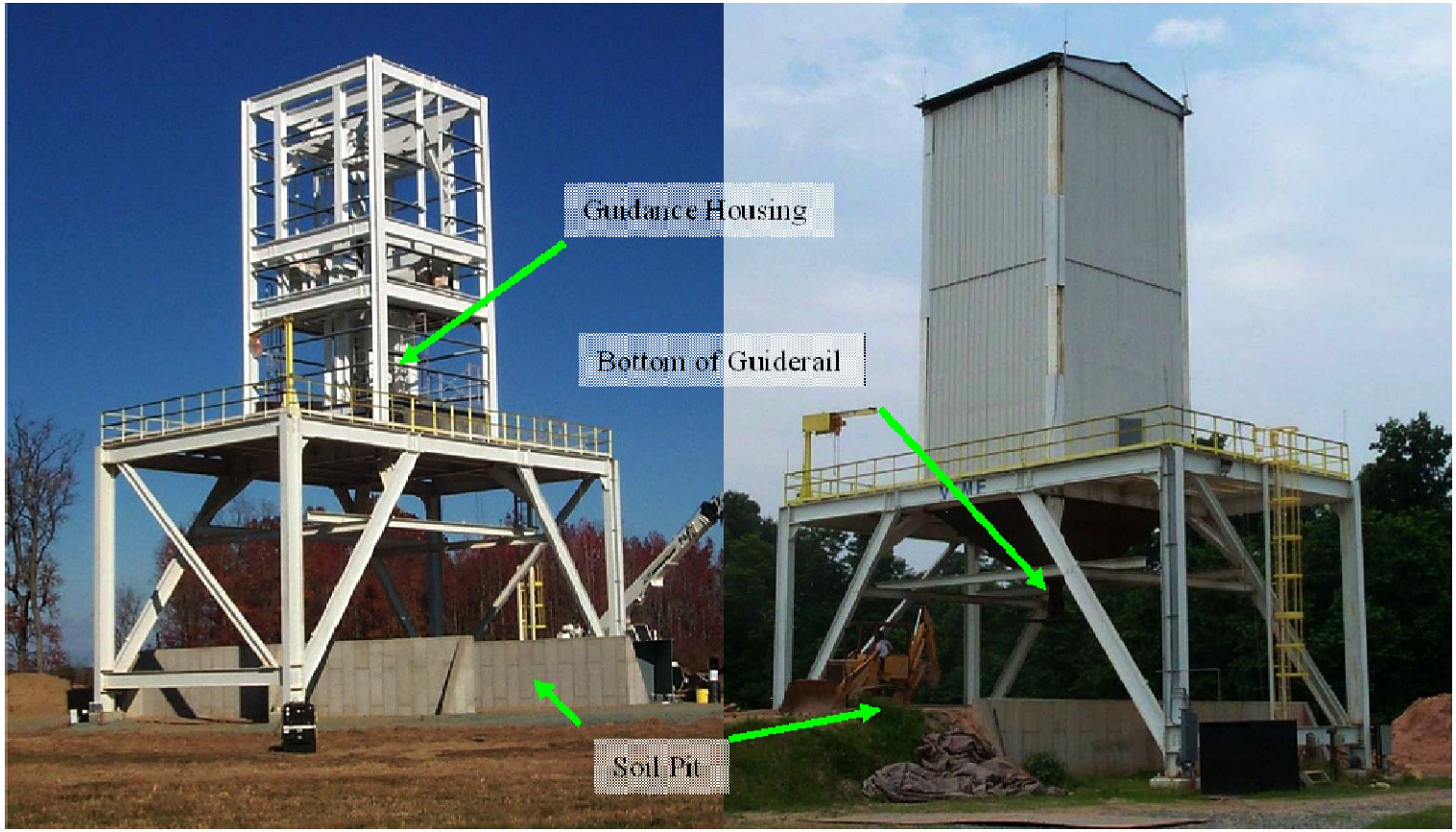

Figure 1. VIMF in construction and during operational testing

4 Operational Verification

Throughout the spring and summer of 2003 several tests were conducted in the VIMF to verify that it was operating as designed. These shots included various size charges placed on steel plates positioned vertically below the center of the guiderail, as well as charges buried in soil beneath the guiderail. Testing indicated that the VIMF had the necessary sensitivity, and was operating as intended. In addition to these physical tests, there was the desire to simulate the response of the VIMF so that operational limits could be developed. Off-center detonation, where the center of the blast is not vertically below the center of the guiderail, are of special concern since they may result in significant lateral translation, as well as twisting.

4.1 "As-Built" CAD Model

As in any large construction project, changes from the original design/drawings were implemented during construction. These changes are typically captured in what are known as "as-built" drawings. These drawings are usually archived as a permanent record of the construction, and often facilitate future modifications and/or repairs to the structure.

In the current project an as-built CAD (Computer Aided Design) model was created specifically for use in simulations of the operation of the VIMF, though the model can be used to easily generate as-built drawings. The original CAD work on the VIMF was done in a package called CADKEY, so a current version of CADKEY [5] was acquired.

Although CAD files existed for much of the VIMF, some seventy percent of the model created in this project was created from scratch. For example, the current CAD model of the guiderail was created entirely from scratch. Creating this part provided a good introduction to CADKEY, and allowed us to capture all that transpired during the construction of the guilderail. The library of standard steel shapes incorporated in CADKEY facilitated the creation of the guiderail model, as well as the models of several other parts. Images of the guiderail model are presented in Figure 2, and a summary of the components of the guiderail is given in Table 1.

For the guidance housing, an existing file was used as a base. Some details as well as some components of the model were changed to reflect actual construction, and the model was updated to include all the pieces present in the finished product. Details of the guidance housing are presented in Table 2, and images of the actual housing and the CAD model are shown in Figures 3 and 4.

4.2 Validation of a Dynamic Model

The model of the VIMF has been verified by direct measurement of parts on the actual structure, and by comparing the computed weight for a portion of the model against a measured value. Also, the dynamic response of the model to an impulse was determined and compared to hand calculations.

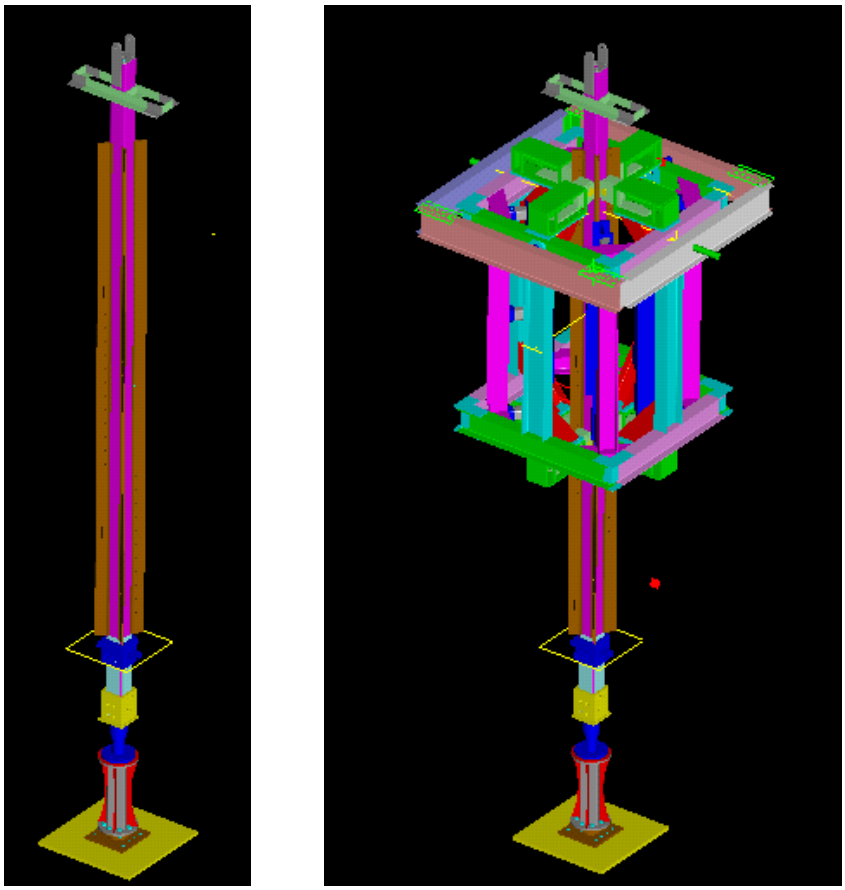

Figure 2. Guiderail assembly and guiderail positioned in Guidance Housing

The dimensions of all major components were measured on site and either compared to existing data in the model, or used to create additional model parts. Subsequently, the weight of the guiderail computed with the modeling software was compared against a measured value. The guiderail had been weighed in place using a load cell and the reported weight was 18,600 lbf. The software reports a weight for the guiderail of 18,670 lbf.

Table 1. Details of the Guiderail

Part	Sub Parts	Geometry	Dimensions Verified	Material	Volume in^3	Density lb / in^3	Weight by Main Groups (lb)	Weight by Sub Part (lb)
Main Tube		12x12x1/2	from steel manual	Square Pipe	10672.1	0.284	3026	3026
10" Tube		10"x .75"	"		7657.1	0.284	2171	2171
Inner Tubing			"		636.6	0.284	181	181
4ft Guiderail Extension					3156.8	0.284	895	
	Main Tube	12x12x1/2 Tube	from steel manual		1073.1	0.284		304
	Gussets 4x	3/4 in THK		RHA	555.9	0.284		158
	Flange Plates 2x	2 in THK			1527.8	0.284		433
Stub Collar					1944.0	0.284	551	
	Pipe 1	OD-8.06	On Site		255.1	0.284		72
	Pipe 2	OD-10.106	On Site		85.8	0.284		24
	Pipe 3	OD-11.459	On Site		320.4	0.284		91
	Flange Plate				717.0	0.284		203
	Pipe 1 Ext				282.8	0.284		80
	Bolts				283.0	0.284		80
Bolt On Adapters					6168.0	0.284	1749	
	Clevis Adapter			Mild Steel (A360?)	2106.2	0.284		597
	Bolt On Adapter			Mild Steel	2401.2	0.284		681
	Bolts?				1660.6	0.284		471
Hoist Clevis	2x plates	40 mm THK		RHA	635.1	0.284	180	180
Cam Plates	4x plates	1/2 in		Mild steel	1063.6	0.284	302	302
Guide Rail Caps	2x plates	1 in		Mild Steel	236.1	0.284	67	67
Syntactic Foam					45194.9	0.025	1151	1151
Guide Rail Stop		L 6x6x3/4	On Site		1591.5	0.284	451	451
Break Fins					13020.8	0.284	3692	
	Fin part 4x				7624.0	0.284		2162
	Connectors 8x	3/8 in		Mild steel	5396.7	0.284		1530
Witness Plate					14623.5	0.284	4147	
	Plate				12230.8	0.284		3468
	Connector				2194.5	0.284		622
	Bolts				198.2	0.284		56
Washer					382.0	0.284	108	108
Accepted Value:	18600				Total Weight (lb) :		18671	18671
Error	71.5							
% Error	0.38%							

Table 2. Details of the Guidance Housing

Part	Sub Parts	Geometry	Dimensions Verified	Material	Volume (in^3)	Density (lb / in^3)	Weight by Main Groups (lb)	Weight by Sub Part (lb)
Vertical Beams		W16x89 x 132"	On Site		13949.5	0.284	3956	3956
Brake mount Beams - added		W12x72 x 136.5"	On Site		11603.3	0.284	3290	3290
Top Box Beams					18362.6	0.284	5207	
	Coped Ends	W16x89x120"			5882.3	0.284		1668
	Straight w/ Gimbal Stiffner	W16x89x120"			7152.7	0.284		2028
	Diagonal Corners	W12x72			3775.1	0.284		1070
	Corner Connectors				1552.4	0.284		440
Brake Mount Assemblies					25735.6	0.284	7298	
	Brake Mount Plates	18x96x3/4 in		Armor Plate	5184.0	0.284		1470
	Retractable Shafts			Square Tubing	3431.8	0.284		973
	Beam	W16x89 x 162 in			17119.7	0.284		4855
Bottom Box Beams					17578.5	0.284	4985	
	Coped Ends		On Site		5882.3	0.284		1668
	Straight		On Site		6368.7	0.284		1806
	Diagonal Corners		On Site		3775.1	0.284		1070
	Corner Connectors				1552.4	0.284		440
Roller Mounts					16747.7	0.284	4749	
	Support Brace	W10x49	On Site		7785.0	0.284		2208
	Mount Plate	18"x40.75"x40mm			8962.6	0.284		2541
Roller Assemblies					39568.5	0.284	12297	
	Sliding Roller Mount				15554	0.284		4411
	Casing				24014.5	0.284		6810
	Rollers							1076.8
					Total Weight (lb) :		41781	41781

Figure 3. Guidance housing being moved from fabrication shop to VIMF site.

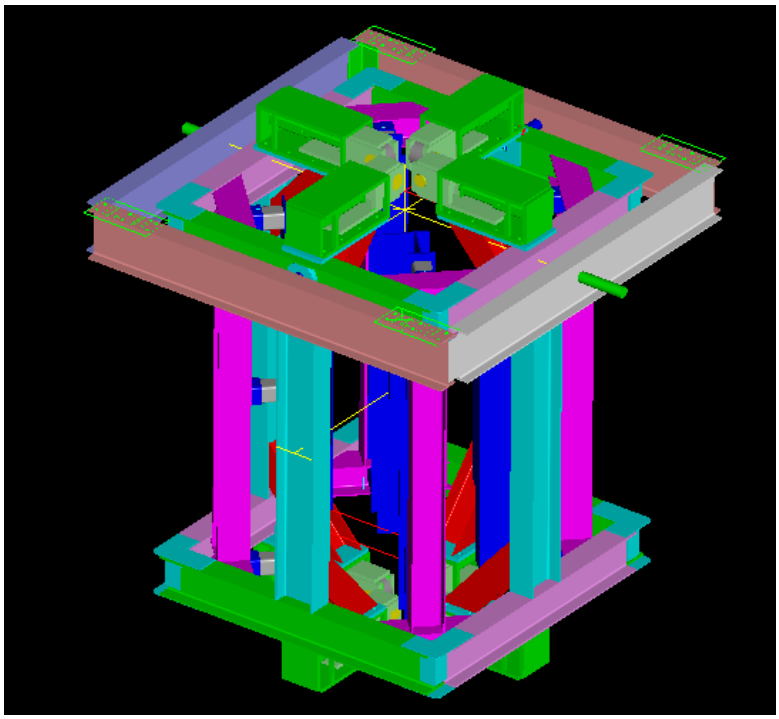

Figure 4. CAD model of guidance housing

To validate the motion simulation capability, the guiderail was excited with an impulse generated by CONWEP [6]. The response predicted by the software was compared to the response calculated using a simple lumped mass excited by the same impulse. The lumped mass analysis used the principle of impulse and momentum noted in Equation 1.

$$V_{n+1} = V_n + \frac{F\,\Delta t}{m} - g\,\Delta t \tag{1}$$

In Equation 1, V = velocity, n = step number, F = average impulsive force for the time step, m = mass, Δt = time increment and g = acceleration of gravity. The impulsive forces were calculated simply as the pressure reported by CONWEP multiplied by the area of the plate at the bottom of the guiderail. The number of time steps, and the actual time increment were determined by CONWEP. Position of the mass was determined by:

$$y_{n+1} = y_n + V\,\Delta t \tag{2}$$

In this equation, V is an average velocity for the time step. To perform the calculations, CONWEP output was imported into a spreadsheet, and the spreadsheet was used to perform the calculations. In Figure 5 the load on the mass is given, and in Figure 6 the corresponding response is presented. The impulse represents reflected pressure for a 2 kg hemispherical surface burst (air-blast) with a 0.4067 m (16 in) standoff. The response predicted for the guiderail using the software package "visualNastran" [7] closely matches that determined through Equations 1 and 2 with a maximum displacement of about 0.26 m as opposed to 0.29 m.

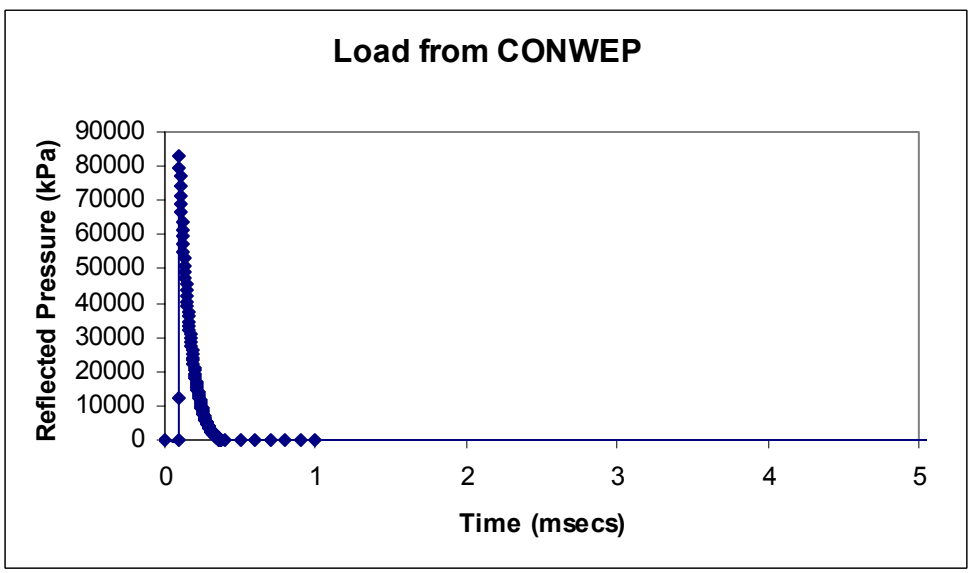

Figure 5. Impulse used in hand-calculation of guiderail motion

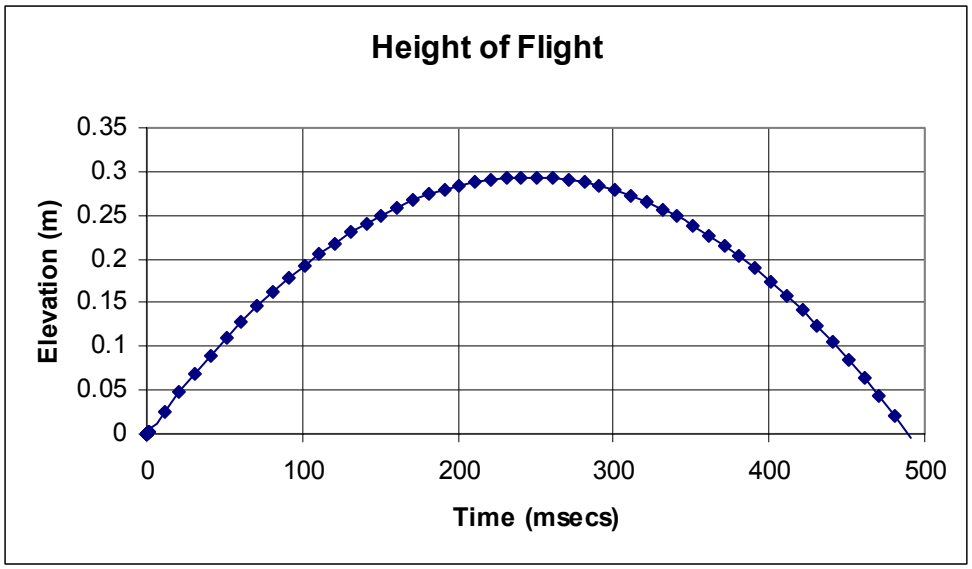

Figure 6. Results of hand-calculation of guiderail motion

4.3 VIMF Simulations

To date, the model of the VIMF created for this project has been subjected to impulsive loads with only the kinematic response of the model being determined. As indicated in the previous section, we feel the software is producing accurate simulations, though only limited analyses have been performed with the entire model (guiderail and guidance housing as opposed to the guiderail by itself).

The software being used is called MSC.visualNastran Desktop [7]. The software can perform motion analyses, finite element based stress and strain analyses, or both.

4.4 Determination of Stress and Strain Fields

After more experience is gained with the software and motion analyses, we plan to start performing calculations of stress and strain. The goal of the calculations is to help set operational limits for the VIMF. Figure 7 is a photograph of the lower end of the guiderail after a 7.5 kg mine with 10 cm of clay cover sent the 18,600 lb (8440 kg) guiderail 114 in (2.9 m) into the air [8].

As can be seen in the photograph, the lower section of the guiderail was damaged in this shot. While this damage is slight and easily corrected, a major concern for the facility is damage to the main section of the guiderail. Provisions were made in the design of the facility to remove and

Figure 7. Damage to lower guiderail from a 7.5 kg land mine.

replace the guiderail, but it would take hundreds of man hours and a significant crane to do so.

A rough sketch of the cross section of the main segment of the guiderail is shown in Figure 8. The filler material noted in the figure is called syntactic foam. It is an aggregate composite of glass microspheres in an epoxy matrix. Calculations based upon this cross section show that there should be no material failure until an axial load of approximately 2,100,000 lbs (9.3 MN) is reached. This sounds like a big number, but as a point of comparison, the peak force applied to the model in the simulation noted earlier was 289 MN. It is expected that a significant percentage of the applied energy is transformed into kinetic energy (motion) and that a relatively small percentage of the energy is converted into internal strain energy in the guiderail components. Estimating the breakout of the energy transformation is difficult to do by hand calculation, and instead we anticipate getting this information from the simulations.

Beyond direct material failure, such as yielding of the steel, buckling is also a major concern for the guiderail due to its long and slender shape. Again, estimates can be made of the buckling load, but this is complicated by the varying effective length of "the column" and its end constraints. Here again, we anticipate the simulation software will be effective in determining accurate estimates of stresses in the guiderail elements, and the likelihood of a instability failure should be reasonably well predicted.

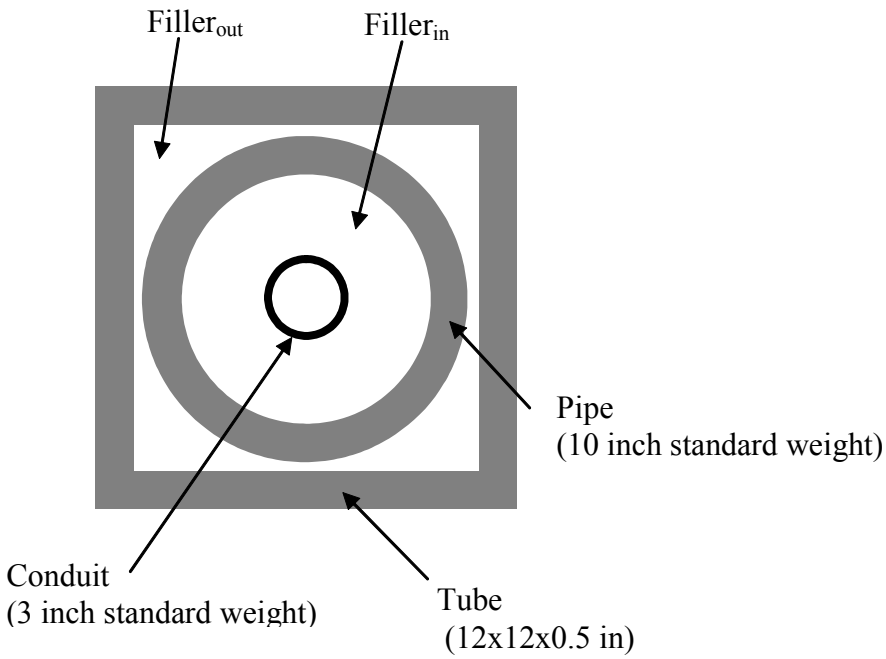

Figure 8. Guiderail cross section

It would be beneficial to instrument the guiderail and measure strains during various experiments to validate the finite element modeling capability of the software. This strain data might also be useful in the operation of the VIMF in that it could be used to confirm data from other instrumentation meant to characterize the impulse generated by the land mine.

A final thought considering the damage to the adapter shown in Figure 7: It may be prudent to put something of a "fusable link" between the main segment of the guiderail and the object being impacted by the mine blast. A well designed and accurately built segment, that is meant to yield and therefore dissipate a large amount of energy, could be used to protect the main segment of the guiderail from unexpected overloading.

5 Other Mine Blast Data

A literature search is being conducted to locate other sources of land mine blast data. In the United States the only organizations that have been identified as having conducted land mine testing are the Army Research Laboratory (ARL) and the Southwest Research Institute. Personnel at Defense R&D Canada - Valcartier have also been studying this problem. They have referenced the data from the Southwest Research Institute as well generated some of their own [9]. Vickers OMC is working in this area [10], and an unreferenced report [11] indicates they are performing mine blast testing and simulations. There is apparently research going on in Australia also [12].

At this point in the literature search, it appears that relatively little hard data will be found. As noted earlier in this report, land mine testing is fraught with difficulties. The data that can be generated with the VIMF is sorely needed.

6 Conclusion

Accurate CAD models of the moving components, the guiderail and guidance housing, of the Vertical Impulse Measurement Fixture (VIMF) have been created. The validity of the models was checked by direct measurement of dimensions, and for the guiderail, by comparison of the computed weight to the measured weight. The ability to simulate the motion of the guiderail was confirmed by comparison with hand-calculated response.

Planned work includes further motion analyses of the guiderail, and guiderail/guidance housing combination. Once we are comfortable with the motion analyses, we will turn on the finite element capability and perform stress analyses of the guiderail with the goal of setting operational limits for the facility.

Acknowledgements

The VIMF represents the culmination of the considerable efforts of many ARL employees. Neil Gniazdowski and Fred Gregory brought the idea to life with the help of Tim Cline and many others throughout the shops of both ARL and ATC. Final proving of the product, and its operation has fallen on the capable shoulders of Jerry Watson and Reed Skaggs, with the able assistance of the technical support group at Range 12. Ours was just a small piece of a very big picture, and we are grateful for the opportunity to participate.

References

[1] http://www.state.gov/t/pm/rls/fs/2001/index.cfm?docid=6631
[2] http://fmso.leavenworth.army.mil/fmsopubs/issues/guerwf/guerwf.htm
[3] http://www.dupuyinstitute.org/pdf/m-4minesgulfwar.pdf
[4] numerous communications with Jon Windham (USACE ERDC WESS) during 2001 and 2002, including a visit to the USACE ERDC Waterways Experiment Station in November, 2001.
[5] CADKEY V21, CADKEY Corporation, Marlborough, MA.
[6] Hyde, D.W., "USER'S GUIDE FOR MICROCOMPUTER PROGRAM CONWEP, APPLICATIONS OF TM 5-855-1," Dept. of the Army, U.S. Army Engineer Waterways Experiment Station, Structures Laboratory, Vicksburg, MS, 1993.
[7] MSC.visualNastran Desktop, MSC.Software Corporation, Santa Ana, CA.
[8] Electronic mail correspondence from Jerry Watson, team leader for the group running the VIMF, 07 August 2003.

[9] Williams, K, et al, "Validation of a Loading Model for Simulating Blast Mine Effects on Armoured Vehicles," presented at the 7th International LS-DYNA Users' Conference, May 19-21, 2002, Dearborn, MI.
[10] http://www.scribe.co.za/pressers/previous/vickers_mineprotection.htm
[11] van Niekerk, Becker, "Land Mine Protection – Dealing with the Uncertainties," unknown source, Vickers OMC, South Africa.
[12] http://www.adi-limited.com/2-01-010-040-000.html