Trajectory Analysis of Discarded Sabot Petals

LTC Robert Hansen
Department of Civil & Mechanical Engineering
United States Military Academy
U.S. Military Academy, West Point, New York

Stephen Wilkerson‡ , Peter Plostins[+], and James DeSpirito[*]

‡ Chief, Weapons Technology Analysis Branch
[+]Chief, Aerodynamics Branch
[*]Research Engineer
Weapons & Materials Research Directorate
US Army Research Laboratory
Aberdeen Proving Ground, MD

1 Executive Summary

The US Army currently employs a number of kinetic energy (KE) and high explosive anti-tank (HEAT) Line-of-sight (LOS) weapon systems to defeat armor targets. These include the M829A1 and M829A2 KE rounds as well as the M831 HEAT round. These munitions use sabots which are discarded shortly after clearing the gun muzzle. Even at their slowest in-flight speeds, discarded petals have sufficient kinetic energy to kill soft targets, causing a significant safety risk to friendly forces forward of the firing gun. Current doctrine in FM 17-12 specifies that friendly forces must not be in front of a firing tank within a rectangular zone 70 meters on either side of the line of fire and extending outward one kilometer. This box is used for all sabot rounds regardless of the type. While previous research has been conducted to ensure that the petals do not interfere with the flight of the primary projectile during separation, no work is currently known that addresses the exact flight path of the discarded sabot petals

This work studies the problem of determining the location of sabot petal impact and quantifying the probability of impact at any downrange location. The method is based on equations from external ballistics and an empirical drag estimate, which are tuned to match experimental trajectory data for the M865 training round petal. Statistical variations for the muzzle velocity, drag coefficient, and orientation of the sabot petal at firing are included in the model. The model simulates the firing of 50000 rounds to produce impact distributions and probability of impact charts. The model predicts the M865 training round petals land within a zone approximately 650m downrange of the gun and 20m on either side of the firing line. Continuing work to describe the regions of impact for service rounds is also described.

2 Introduction

The US Army currently employs a number of kinetic energy (KE) and high explosive anti-tank (HEAT) Line-of-sight (LOS) weapon systems to defeat armor targets. These include the M829A1 and M829A2 KE rounds as well as the M831 HEAT round. These munitions use sabots which are discarded shortly after clearing the gun muzzle. Even at their slowest in-flight

speeds, discarded petals have sufficient kinetic energy to kill soft targets, causing a significant safety risk to friendly forces forward of the firing gun. Current doctrine in FM 17-12 specifies that friendly forces must not be in front of a firing tank within a rectangular zone 70 meters on either side of the line of fire and extending outward one kilometer. This box is used for all sabot rounds regardless of the type. While previous research has been conducted to ensure that the petals do not interfere with the flight of the primary projectile during separation, no work is currently known that addresses the exact flight path of the discarded sabot petals.

The goal of this research is to quantify the probability of sabot petal impact at locations forward of the firing tube. Knowledge of probabilities of sabot impact will allow more realistic training at the National Training Center at Fort Irwin, California, and may ultimately allow for heavy/light operations where soldiers safely operate within the current FM71-12 limits. The calculation of projectile trajectories is readily obtainable for streamlined bodies with known initial conditions using various aerodynamic or ballistic mathematical models. Determination of sabot petal trajectories and ultimate impact points is complicated by several factors. First, the sabot petal is not designed to fly like a bullet. Upon separation from the primary projectile, the sabot petal is a tumbling body dominated by massive flow separations. Analytical determination of the drag characteristics for such a body in flight is beyond reach. Computational determination of the unsteady petal drag is still a very challenging problem. Additionally, the sabot petal experiences a wide range of Mach numbers over its trajectory. The sabot of a KE round may separate at speeds exceeding Mach 4.0. By the time the petal impacts the ground its speed can be well below supersonic. Initial conditions for the sabot petal trajectory are affected by the muzzle velocity, which can vary based on the individual round, temperature of the gun tube, and other factors.

Figure 1 shows a general configuration of three sabot petals around a kinetic energy penetrator (drawing not to scale). The petal initial conditions are also greatly affected by the orientation of the petal splits when loaded in the tube. The orientation of the splits is arbitrary, and this must be accounted for when determining the petal trajectories.

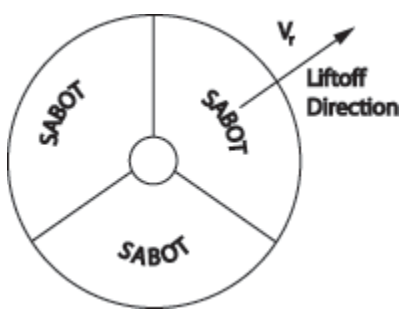

Figure 1. Sabot Liftoff

This paper describes a solution approach to determine sabot petal trajectories by combining traditional analytical methods with either empirical or computational estimates of the petal drag. The differential equations of external ballistics based on Newton's Second Law are used as the governing equations during the projectile flight. Initial conditions are obtained from a blend of statistical modeling and analysis of experimental evidence. The solution method is applied to the sabot petals of the M865 training round using empirical estimates of the petal drag. Trajectories are compared to experimental radar data for the M865 and probability of impact charts are presented for various gun elevations.

While the work on the M865 training round allowed the solution method presented in this paper to be developed and partially validated against limited experimental data, the ultimate motivation for this research lies in being able to predict the petal trajectories of existing service rounds, such as the M829A1 and M829A2 APFSDS-T kinetic energy rounds, or for rounds in development. Accordingly, initial efforts to obtain results for the sabot petal of the M829A2 round have begun. The petal drag is a strong function of the Mach number and the orientation of the petal during its flight. The drag is a time varying input to the ballistic equations. Initial efforts to use computational fluid dynamics to predict the petal drag of an M829A2 petal are also discussed.

3 Approach

3.1 Equations of Motion

The equations of motion used are based on reference 2. A simple model of a projectile in flight can be developed based on Newton's 2nd Law. Considering three Cartesian components (x, y, and z), the sum of forces can be written as:

$$\sum F_x = ma_x$$
$$\sum F_y = ma_y$$
$$\sum F_z = ma_z$$

where F is the force components in each Cartesian coordinate direction, m is the mass of the petal and a is the acceleration. Rotational moments were not considered in this study.

Shortly after the sabot petal separates from the penetrator, the petal becomes a tumbling body. It is assumed that the tumbling petal generates no net lift during its flight time. It is further assumed that the rotation rates of the tumbling petal are high enough such that no net aerodynamic lift force is generated over small time increments. This assumption allows the model to be created without considering a lift force. Considering the only aerodynamic force to be drag (the force directly opposing motion) and neglecting the Coriolis force, the above equations are rewritten as:

$$-D_x = m\frac{d^2x}{dt^2}$$
$$-D_y - mg = m\frac{d^2y}{dt^2}$$
$$-D_z = m\frac{d^2x}{dt^2}$$

where D_x, D_y, and D_z are the components of drag, g is the acceleration constant due to gravity and t is the time. From extensive experimentation, the total drag of a projectile is known to

have the form $D = K_D \rho d^2 V^2$, where $K_D = C_D \pi/8$ is the dimensionless ballistic drag coefficient, ρ is the air density, d is the diameter of the penetrator and V is the petal total velocity. Multiplying the total drag by the direction cosines produces expressions for the drag components. For example the *x*-component is calculated by:

$$D_x = D\frac{V_x}{V} = K_D \rho d^2 V^2 \frac{V_x}{V} = K_D \rho d^2 V V_x = K_D \rho d^2 V \frac{dx}{dt}$$

Substituting the drag components produces the final form of the governing equations of motion used in this study:

$$-K_D \rho d^2 V \frac{dx}{dt} = m\frac{d^2 x}{dt^2}$$

$$-K_D \rho d^2 V \frac{dy}{dt} - mg = m\frac{d^2 y}{dt^2}$$

$$-K_D \rho d^2 V \frac{dz}{dt} = m\frac{d^2 z}{dt^2}$$

3.2 Two-Dimensional Model

No data was available for the aerodynamic characteristics of the M865 sabot petal, so the first approach was an attempt to replicate the experimental data in Appendix A by assuming various forms of the Mach number versus drag coefficient curve for the sabot petal. The experimental data in Appendix A only recorded the range, altitude, and velocity of the petal (i.e. no information was available on the lateral displacement) so the initial model considered only the two-dimensional trajectory. Using the experimental data to obtain the required initial conditions, the above coupled, ordinary differential equations of motion for *x* and *y* were solved using the variable time step Dormund-Prince Runge-Kutta solver available in MATLAB[3]. The actual equations were modeled in MATLAB using the SIMULINK[3] graphical user interface. Figure 2 shows the SIMULINK diagram representing the two equations. The block in red, labeled velocity, accepts as input the component velocities and applies the function $V = \sqrt{(x')^2 + (y')^2}$. The orange colored block in figure 2, labeled Kd Lookup Subsystem, consists of the blocks shown in figure 3.

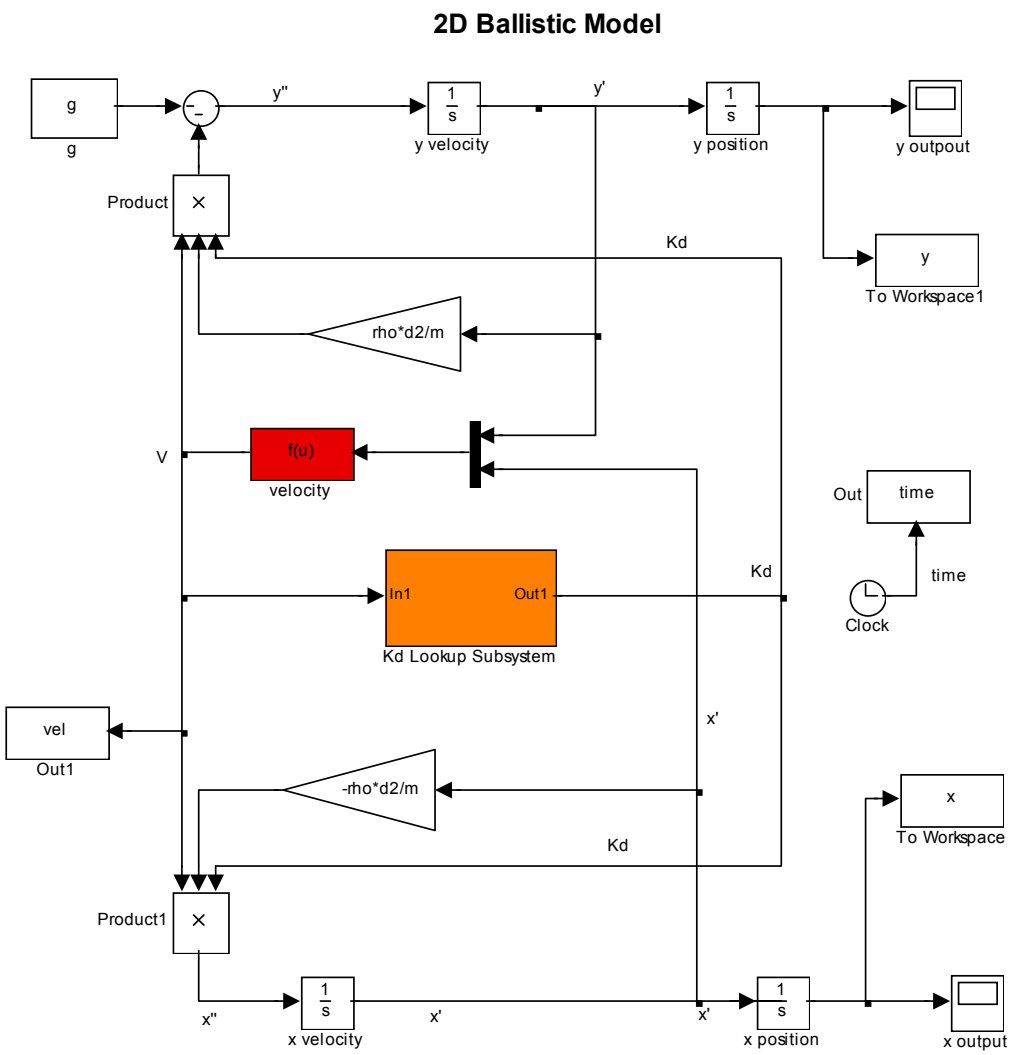

Figure 2. 2D Ballistic Model – SIMULINK Diagram

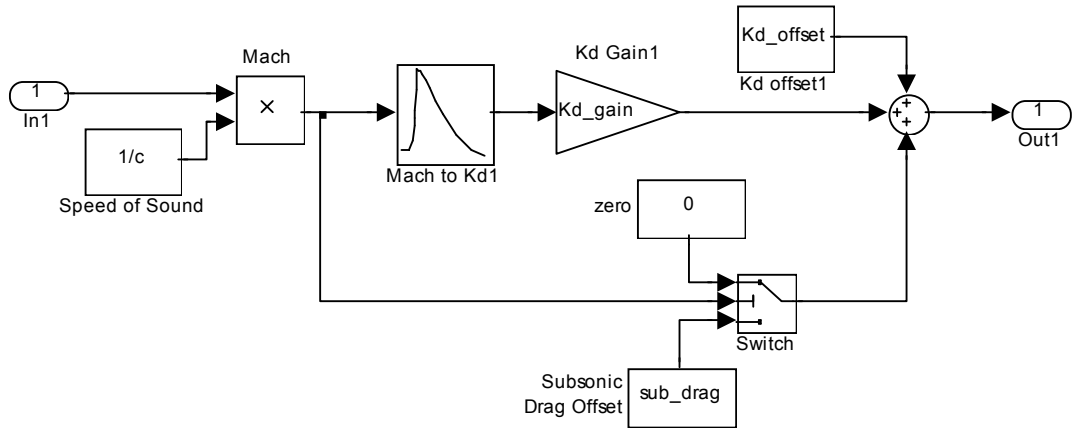

Figure 3. The K_d Lookup and Correction Subsystem

The total velocity is input at port 1 and divided by the speed of sound to obtain the Mach number. The Mach number is then input into the 2D lookup table (a special tool available in SIMULINK) that interpolates the ballistic drag coefficient based on the flight Mach number. The lookup table contains data representing the ballistic drag of a M829A1 in flight projectile (penetrator rod). This data was chosen since data for the M865 was not available. It was assumed that the shape of the aerodynamic drag curve for the sabot petal would be similar to that of the penetrator. The values for the penetrator drag coefficient were then scaled and offset by empirically determined factors.

A scaling factor of 1.0 and an offset (referred to as continuous offset) of 0.10 provide good agreement of the calculated trajectories with the experimental data for round 394. Careful study of initial results indicated that the subsonic portion of the calculated trajectory experienced more error that the supersonic portion. To correct this the model adds an additional offset factor to the drag coefficient estimate if the Mach number is below one. The subsonic offset factor used is 0.14.

3.3 Three-Dimensional Model

Once the scaling factor and offsets were empirically determined for the 2D model, such that the simulation results closely matched the experimental data, the model was extended to three dimensions by adding the third equation for the *z*-direction. The model is shown in figure 4. The blue boxes represent the terms of the *x*-direction equations, the green blocks are the *y*-direction equations, and the gold blocks are the z-direction equations. The lookup table subsystem remains unchanged. The velocity function is modified in the 3D model to form total velocity based on three component velocities. Since the experimental data does not contain information for the initial velocity in the *z*-direction, this was obtained by analysis of a high-speed video. The radial, or lift-off, velocity was determined to be 40 meters per second.

4 Results

4.1 Two-Dimensional Modeling Results

The 2D model was run using an initial velocity corresponding to round 394 from the experimental data (1686.9 m/s). The ballistic drag coefficient scaling and offset was tuned for round 394 until satisfactory agreement, shown in figure 5, was attained. The experimental data records the first point in the trajectory about 50 m from the muzzle. Accordingly, 50 m was added to the experimental range data in each of the following plots. The scaling factor used in all the 2D results was 1.0 and with a continuous offset of 0.10 and a subsonic offset of 0.14.

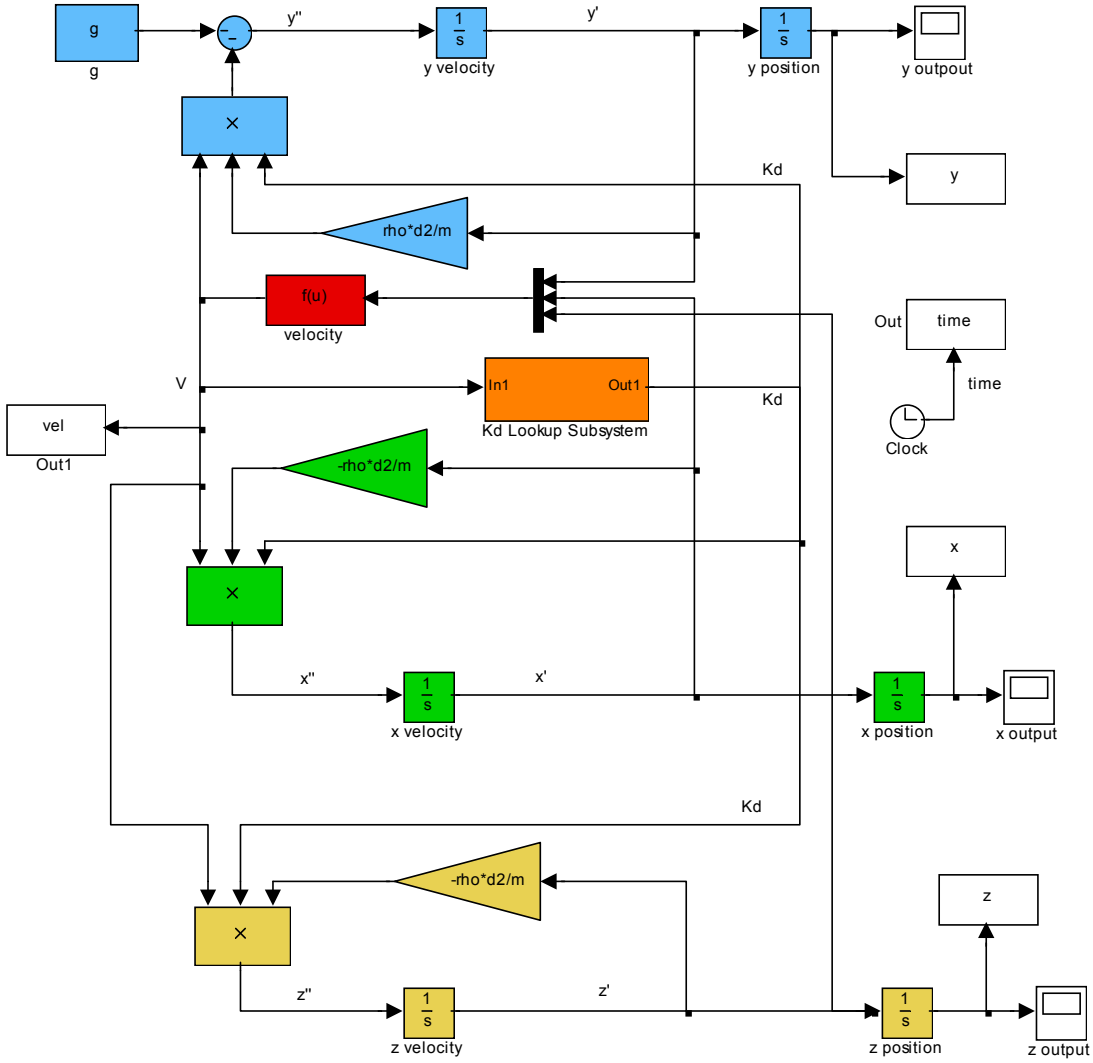

Figure 4. 3D Ballistic Model – SIMULINK Diagram

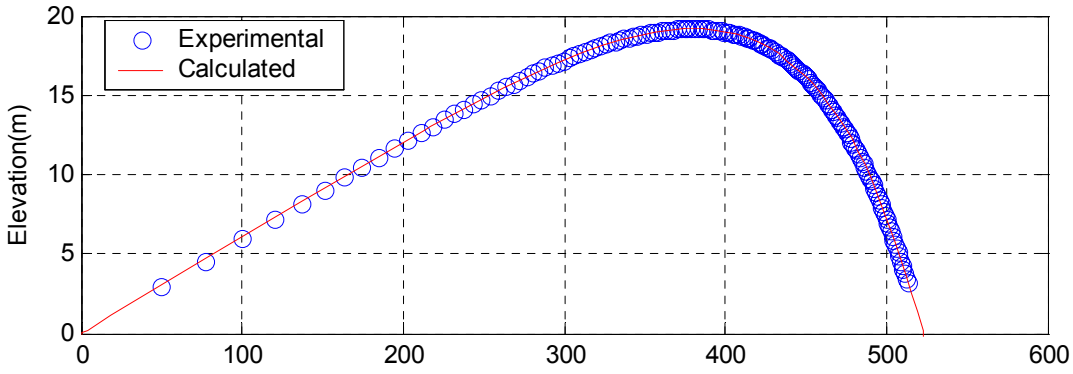

Figure 5. Trajectory Comparison for Round 394
(solid line: MATLAB simulation; symbols: experiment)

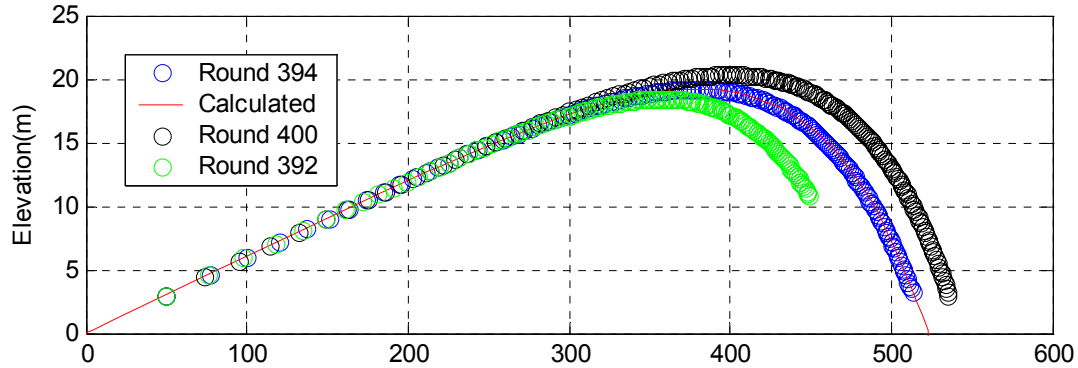

Figure 6. Trajectory Comparison for Rounds 392, 394, and 400
(solid line: MATLAB simulation; symbols: experiment)

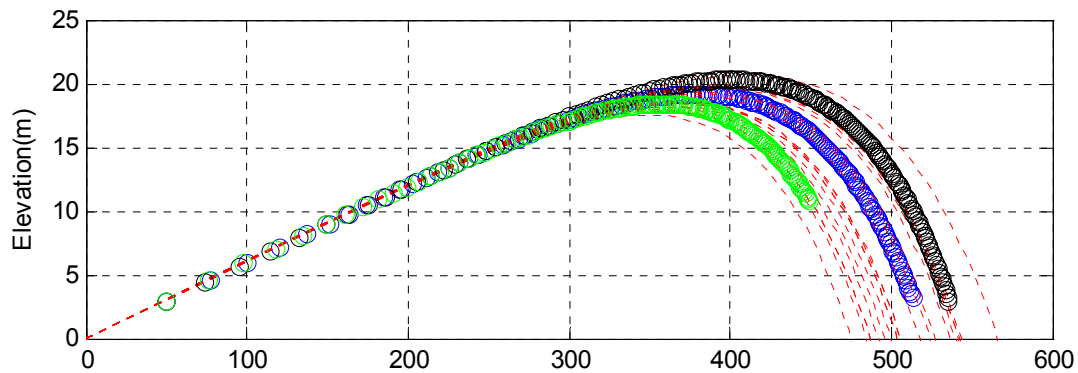

Figure 7. Trajectory Comparisons with Statistical K_d Variation
(dashed line: MATLAB simulation; symbols: experiment, see figure 6 legend)

Rounds 392 and 400 were fired with approximately the same muzzle velocity as round 394, yet produced different trajectories as seen in figure 6. Applying the 2D model that was tuned for round 394 to round 392 obviously produces less satisfying results, indicating that the modeled trajectory solutions are not accurate for a variety of firings with only one value of offsets and scale factor. Note that the data for round 392 does not include the entire trajectory. Variability of the trajectories of the petals fired from the same gun at a constant angle of elevation may come from several factors. The test rounds were consistently loaded with the sabot split at top dead center, but the orientation changes as the round travels down the tube. Additionally, the condition of the petals exiting the tube may vary due to the extreme in-tube stresses affecting the surface condition of the petal.

A normal distribution of continuous offset values was applied using a standard deviation of $0.25K_d$. Twenty simulated firings, each one using the same subsonic drag offset but a statistically varied continuous drag offset, are shown in figure 7. The model now brackets the trajectory of all the rounds fired at the same muzzle velocity.

4.2 Three-Dimensional Modeling Results

The 3D simulations were run using statistical variation of the muzzle velocity and the sabot petal orientation. The muzzle velocity (V0) was the average of the test data (1458.9 m/s), with a standard deviation of 0.15V0. While a constant radial (liftoff) velocity of 40 m/s was used in the initial conditions, the petal orientation affects the initial Cartesian velocity components. The sabot's angle varied 180 degrees from 12 o'clock to 6 o'clock (from the loader's viewpoint) using a random variable. The results in the right half-plane were mirrored about the line of fire to produce the following impact and probability plots. The results for a quadrant angle of elevation (QAE) of 2.5 mils are presented here. Results for a 10 mil QAE are provided in Appendix B. On the top of each plot the mean Muzzle Velocity (MV) is indicated along with the Gun Elevation (GE), Number of Runs (NR) and Radial Liftoff Velocity (LV).

Figure 8 depicts the distribution of impact points. The range of impacts varies from approximately 40m to 650m, and the lateral displacement covers approximate 20m on either side of the direction of fire. The very low angle of fire creates a void in the middle of the distribution pattern. The area over which all rounds landed was meshed and the number of impacts in each grid square counted. The grid for the 2.5mil calculation is defined by grid lines in increments of 35m in range, and 1 meter in lateral displacement. The probability of impact for the 2.5 mil case is shown in figure 9. The white areas represent a probability of impact of 0.5% or less. The area where probabilities are above 0.5% can be defined by a box 450m by 10m on either side of the line of fire. Note that the cutoff of 0.5% is chosen arbitrarily and does not represent a recommended level for soldier or equipment safety.

Sabot petals still have considerable energy at ground impact and are known to bounce or skip, especially on hard ground. To account for this, figure 8 was redrawn with triangles extending 100m in a fan-like pattern from the impact points. Figure 10 shows the center of impact points from the 2.5 mil elevation run with an extended danger area in front of the impact locations. Considering skip, the maximum range now approaches 800m, which is consistent with the maximum range where sabot petals are found on the firing range.

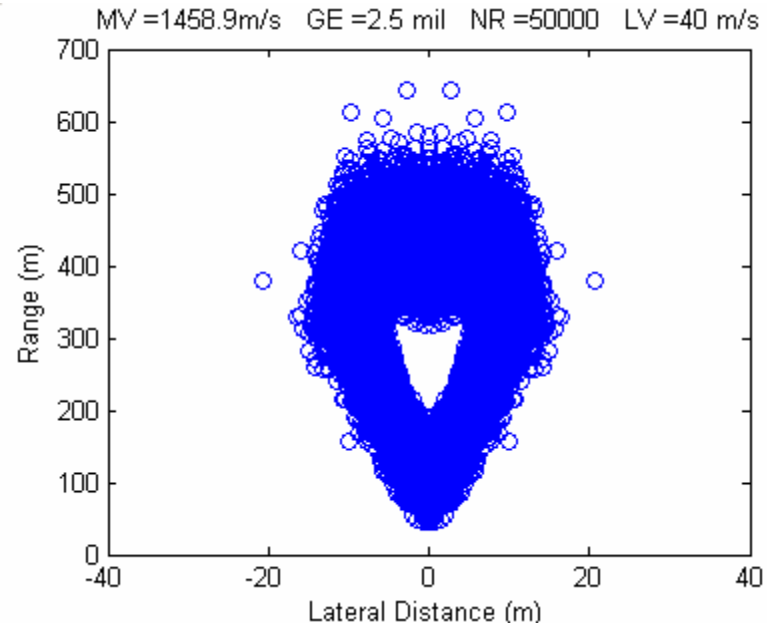

Figure 8. Distribution of Impact Points – 2.5 mil

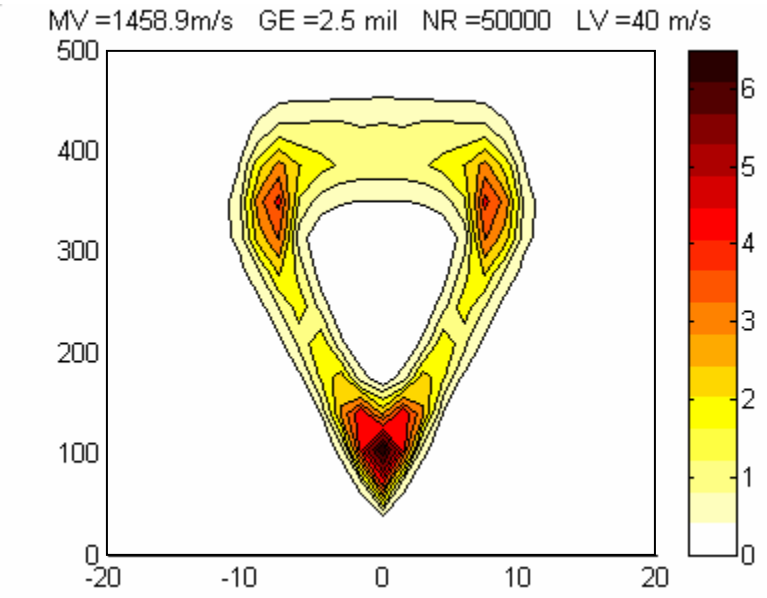

Figure 9. Probability of Impact Contours – 2.5 mil

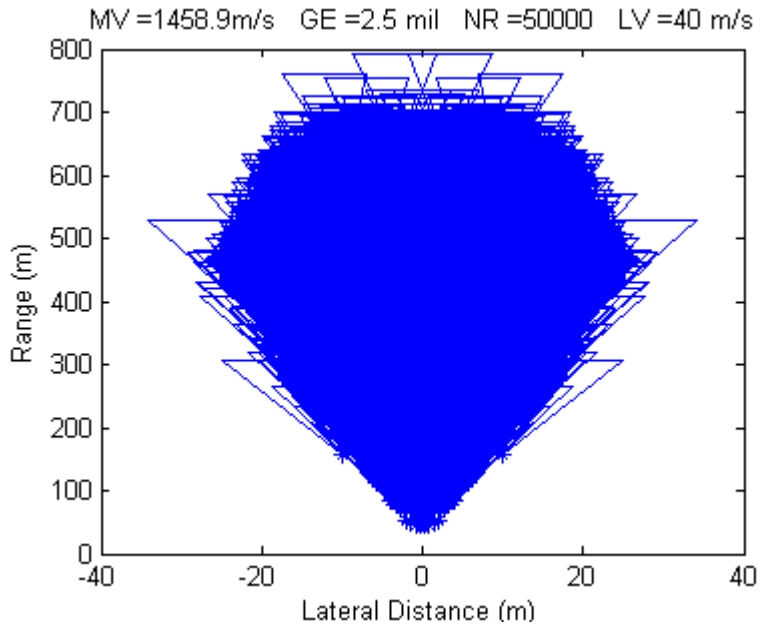

Figure 10. Extended Impact Distribution – 2.5 mil

5 Sabot Trajectories for Service Rounds

Attempts to model the M865 sabot petal used a highly empirical estimate of the drag versus Mach number function. Work to more accurately define the drag for the M829A2 service round petal using computational fluid dynamics (CFD) is currently underway. This approach uses the commercial CFD code FLUENT[4] to define the drag and moment components at various Mach numbers and orientations of the petal. These drag and moment coefficients will then feed into a six degree-of-freedom (6DOF) mathematical model. Currently, only a limited number of computational runs have been accomplished and there is insufficient computational data to calculate a complete trajectory for the M829A2. Additional simulations need to be conducted for the complete range of flight Mach numbers and petal orientations before the database is sufficient to calculate a complete trajectory. The computations are being run on the ARL Major Shared Resource Center (MSRC) High Performance Computers and most of the grids were generated on workstations owned by the Aerodynamics Branch.

A three-dimensional model of the M829A2 sabot petal with an unstructured surface mesh is shown in figure 11. The volume mesh for this grid contains approximately 3 million cells. Three geometric details of the sabot petal are not included in the model because of their negligible impact on aerodynamic forces. These neglected details include the ½" of threads on the aft end, the groves that run along the entire inner radius of the petal that seat the penetrator rod, and the two ridges just aft of the rearward "hump". The pressure coefficient is shown in figure 12 for the conditions of Mach number 0.5 and flow aligned with the longitudinal axis of the sabot.

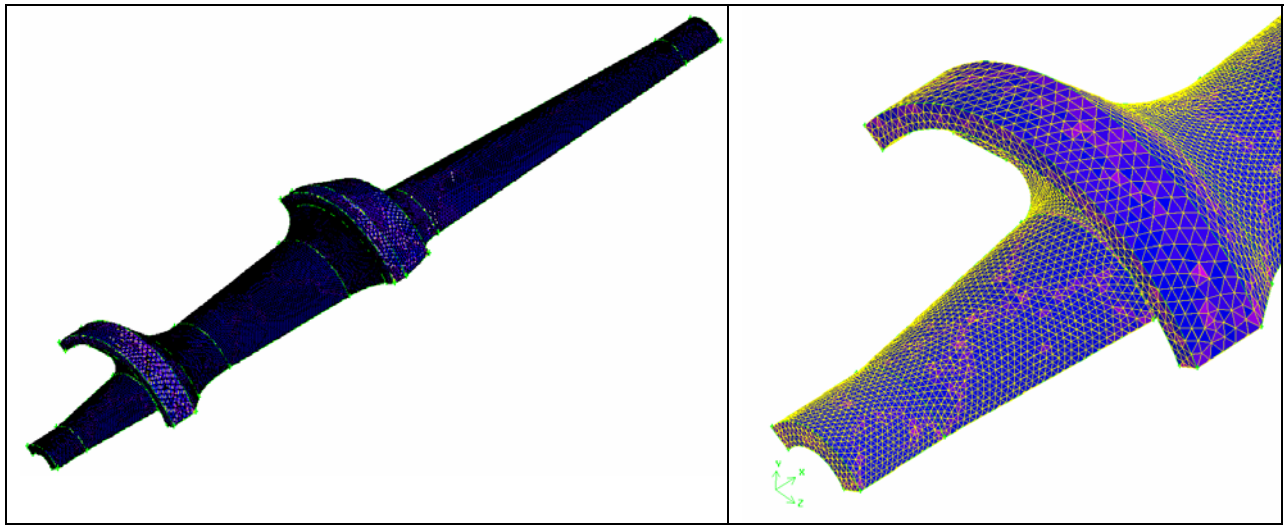

Figure 11. Geometric Model and Surface Mesh of the M829A2 Sabot Petal (left panel: full petal; right panel: close-up of front)

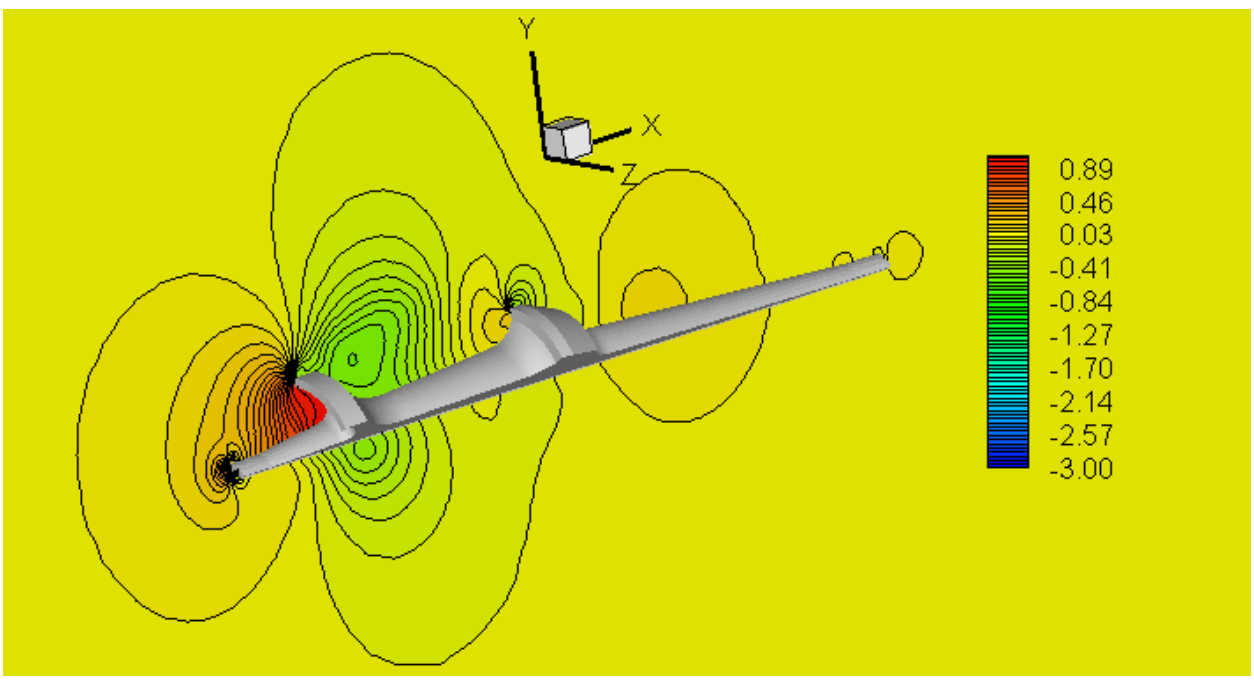

Figure 12. Contours of Pressure Coefficient for the M829A2 Sabot Petal in the z=0 Plane (Mach 0.5, flow is in the positive x-direction)

6 Conclusions

This paper presents a simplified approach to the problem of estimating sabot impact locations that, with sufficient experimental data for complete validation, would be accurate enough to characterize the danger areas. The differential equations developed use the basic laws of physics to describe the sabot flight trajectory. An estimate for the M865 sabot petal drag coefficient is made based on offsetting existing drag data for the M829A1 penetrator. Despite this crude method of drag estimation, the simulation results are able to successfully replicate the experimental 2D trajectories with a given muzzle velocity. By varying the petal drag using a normal distribution, the model developed here captures with good accuracy the trajectory of the sabot petal for the M865 training round. The 3D model also normally distributes the muzzle velocity and randomly varies the orientation of the petal relative to the gun tube. The impact distributions observed from firing 50,000 rounds using this model result in probability distributions. Once experimental data is obtained for service rounds, this model should be adapted by adjusting the empirical constants used to estimate petal drag. Probability plots for service rounds could then be immediately produced and used for more realistic training at the National Training Center. The computational studies will provide a more detailed prediction of the drag for the sabot petals of the M829A2 service round, and when combined with a full 6DOF model will provide impact probabilities. With experimental verification, future results for the service round sabot discard could be used to guide heavy/light operations inside of the current doctrinal 1000m x 140m zone.

References

[1] Hansen, R.P. and Wilkerson, S., "Sabot Discard and the Battlefield," ARL Technical Report, to be published.

[2] Department of Civil and Mechanical Engineering, *Mechanical Design: ME402 Class Text*, United States Military Academy, Fall, 2001.

[3] MATLAB and SIMULINK, The Mathworks, Inc, Natick, MA.

[4] FLUENT, FLUENT Inc, Lebanon, NH.

Appendix A - Summary of ATEC Experimental Data

The Army Test and Evaluation Command at Aberdeen Proving Ground took experimental measurements of the petal discarded from an M865 training round. Table 1 summarizes the round number, date-time of shot, and the muzzle velocity for each round.

ID	Round Number	Date Time	Muzzle Velocity
1	Round 392	1/22/2003 10:11	1687
2	Round 394	1/22/2003 10:37	1686.9
3	Round 399	1/22/2003 11:24	1353.8
4	Round 400	1/22/2003 11:31	1686.5
5	Round 408	1/22/2003 14:36	1398.7
6	Round 416	1/23/2003 9:41	1415.1
7	Round 421	1/23/2003 10:14	1435.6
8	Round 423	1/23/2003 10:27	1321.3
9	Round 429	1/23/2003 11:07	1691.4

Table 1. Firing Data from M865 Training Rounds

Data from the radar measurements starts approximately 50 meters down range. Data recorded includes the time, downrange distance, height, and velocity. Rounds 392, 394, and 400 were used in this study because they all had the same muzzle velocity. See reference 1 for a more complete description of the data.

Appendix B - Three Dimensional Results for 10 mils

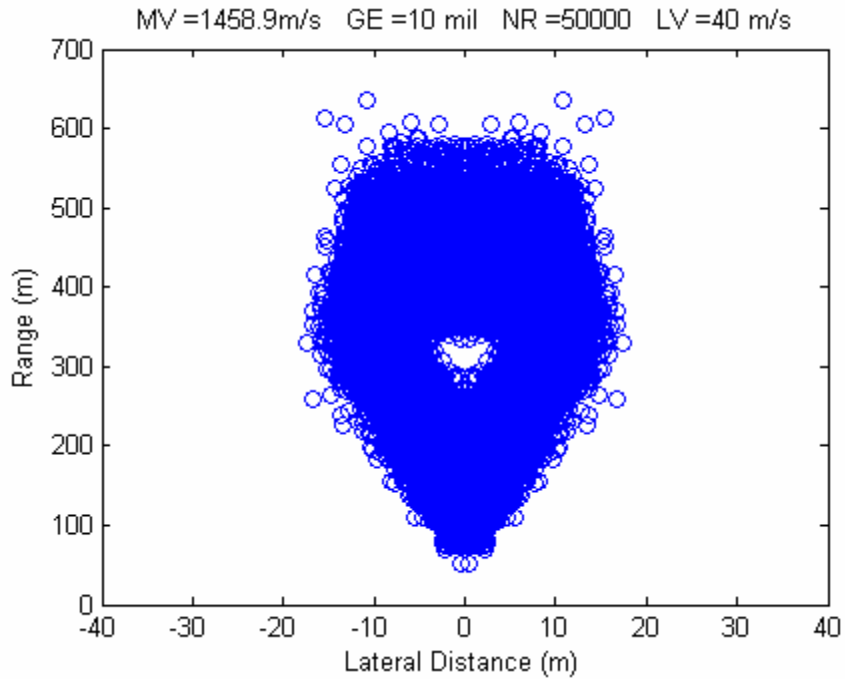

Figure B-1. Distribution of Impact Points – 10 mil

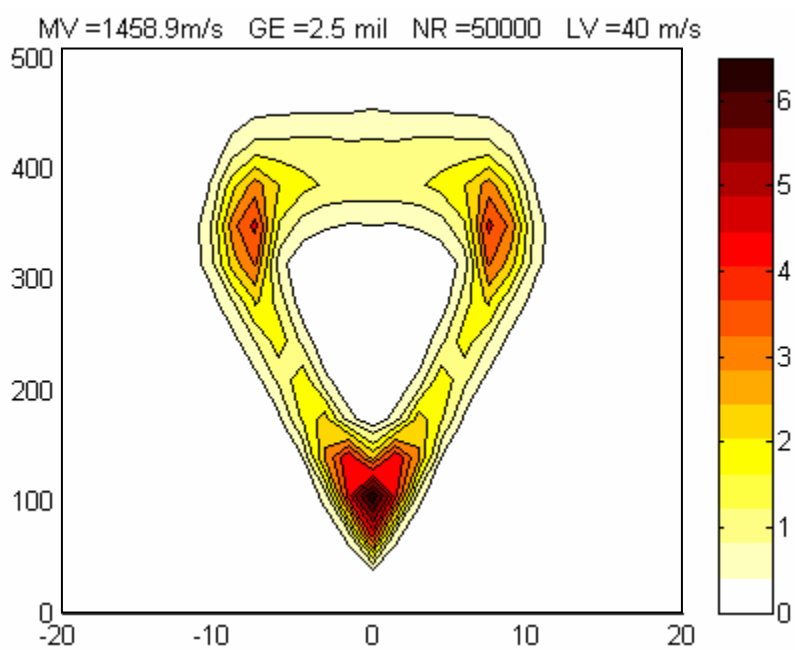

Figure B-2. Distribution of Impact Points – 10 mil

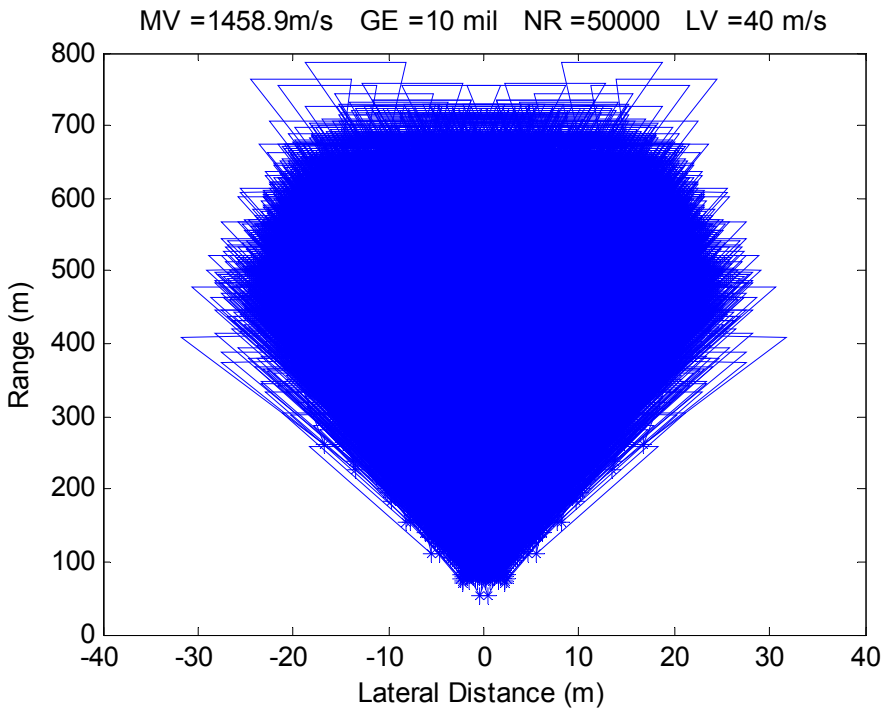

Figure B-3. Extended Impact Distribution – 10 mil