NASA Electric Systems Modeling

Cadet Jonathan Colledge

Supervisor:

Mr. Josh Freeh

Research Scientist

NASA Glenn Research Center

Cleveland, Ohio

NASA Electrical Systems Modeling: Past Analyses

- **High-altitude, long-endurance aircraft power and propulsion**
- **Planetary science aircraft power and propulsion**
- **Flywheel electrical power storage**

NASA Electrical Systems Modeling: Present

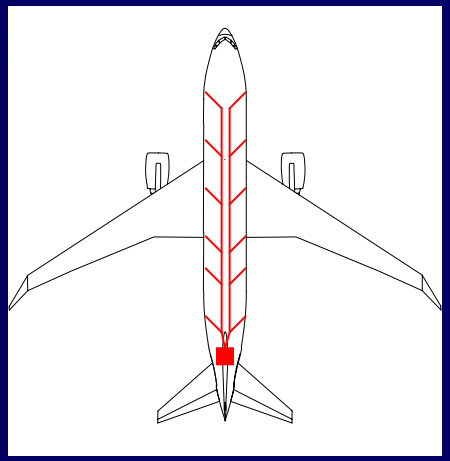

Fuel cell power units for large transport aircraft

- Current NASA contract with Boeing to study the replacement of the current gas turbine aircraft APU with a fuel cell power unit on future commercial aircraft.

High-altitude stationkeeping airship power and propulsion

- Ongoing studies addressing different missions and concepts including earth science, communications, and surveillance

General aviation/UAV power and propulsion

- Ongoing studies of the feasibility of fuel cell-powered general aviation aircraft or UAV and the technology improvements required for those applications
- Larger 50 and 100-place aircraft were also analyzed at a lower level of fidelity to determine scalability of systems

Potential future analyses

- On-board space electrical power sources

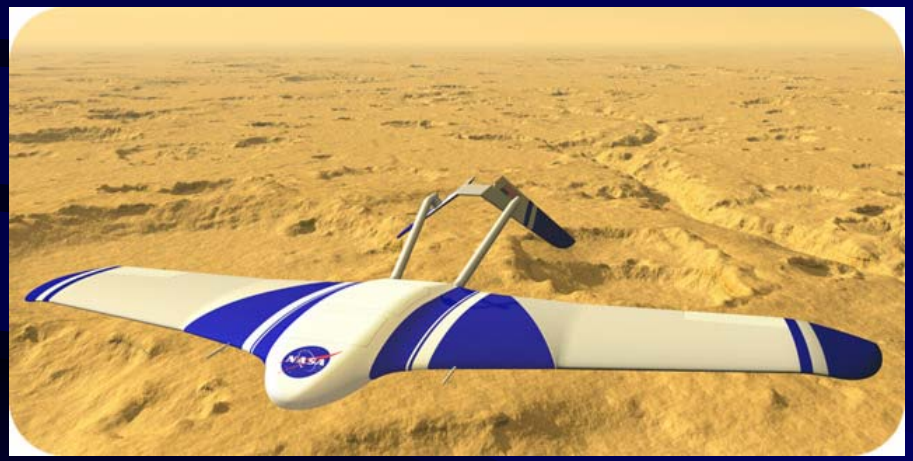

- Ground power applications such as distributed, hybrid fuel cell/gas turbine systems

Sample electrical propulsion/power system

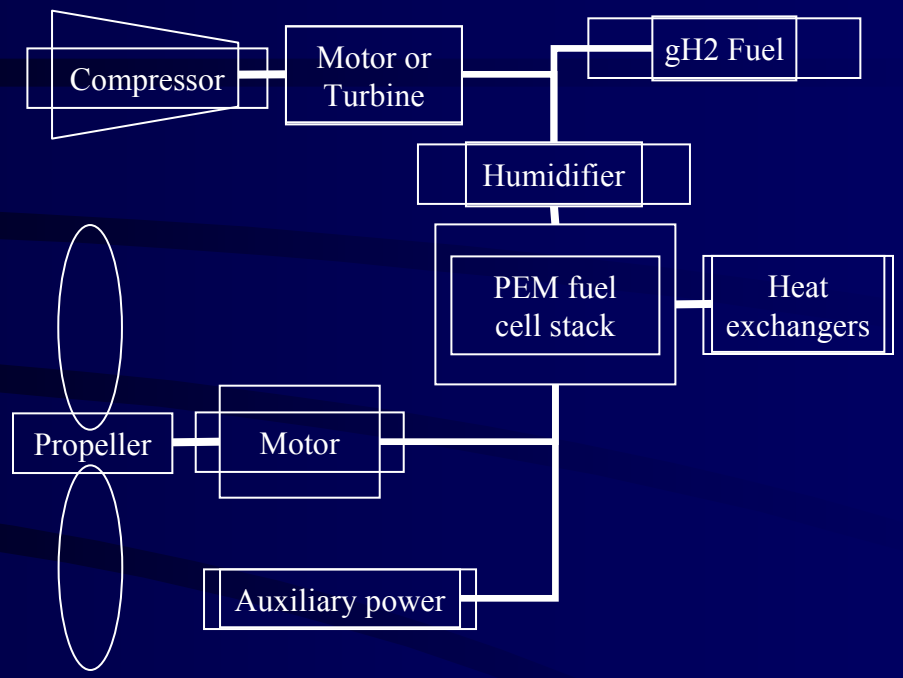

- Systems models are required to evaluate system design, trade studies, 'supersystem' performance
  - (e.g. airplane range evaluation is based on fuel use of propulsion system)
- Accuracy at the system level can be traced to least accurate model

USMA Specific Study

- Gain an understanding of Fuel Cells and Electric Motors
- Computer model of an electric motor

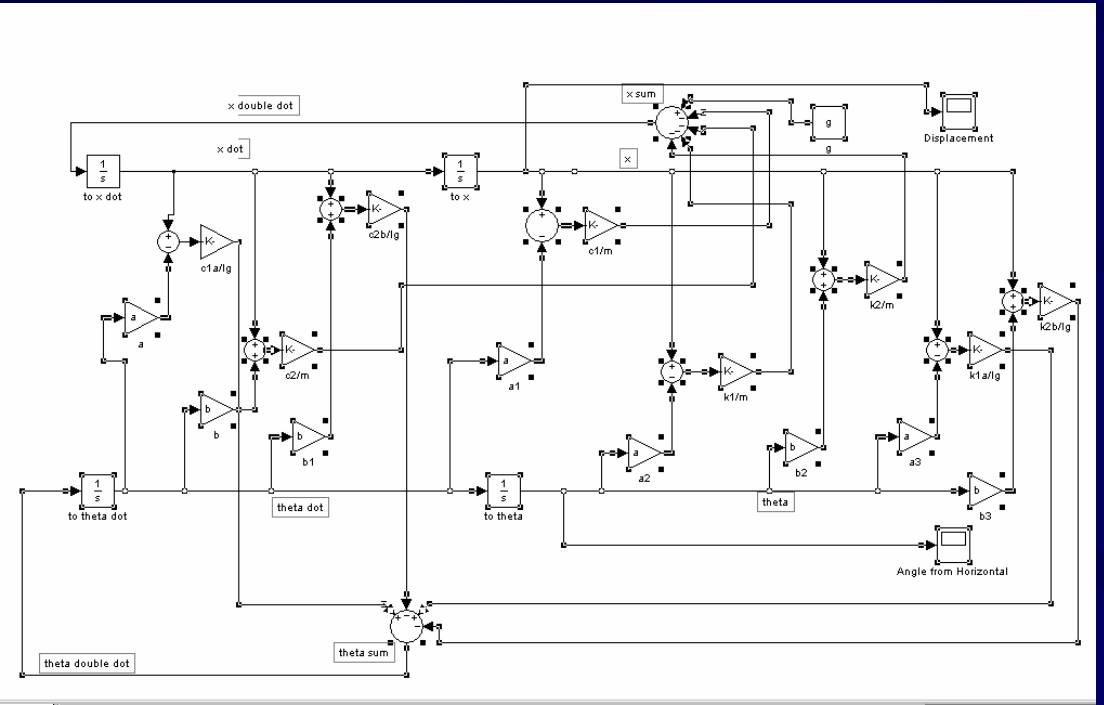

– Previous examples

– MATLAB - SIMULINK

Conclusions
&
Learning Points