Analytical Kinematic Expressions for Pseudovelocity Shock Response Spectra of Generally Damped Linear Systems

R. David Hampton, Kip P. Nygren, & Jared B. Erickson
Civil & Mechanical Engineering Department
U. S. Military Academy
West Point, NY

Ting H. Li
Ordnance Materials Branch
Weapons & Materials Research Directorate
U. S. Army Research Laboratory
Adelphi, MD

1 Executive Summary

Algebraic expressions were recently reported for the time-domain response of a base-excited mass-spring-damper (MSD) system to certain analytical inputs. These local, seismic inputs were idealized as stemming from remote shock inputs filtered through an arbitrary linear system's eigenstructure, under the assumption of proportional (Rayleigh) damping. Remote shock inputs of three forms were considered: (1) an ideal impulse, (2) a rectangular pulse, and (3) a saw-tooth pulse. The MSD kinematic responses were used to determine Shock Response Spectra (SRS) without necessitating numerical evaluation of a convolution integral. The present paper determines corresponding analytical expressions for the case of a generally damped (not necessarily Rayleigh-damped) linear system subject to a remote ideal impulse.

2 Introduction

Modern warfare calls for many military systems to be capable of sustained operation under extreme environmental conditions. Designers of military equipment must typically harden their hardware to maintain an acceptable degree of functionality when exposed to mechanical shock, from such sources as blast-waves, collisions, and projectile impacts. Frequently the military and its vendors define a design shock environment in terms of the maximum kinematic response, over time, that it will produce in a hypothetical, single-degree-of-freedom (SDOF) mass-spring-damper (MSD) system attached at the point of a kinematic disturbance (see Fig. 1). The disturbance is typically a direct impulsive displacement or acceleration, not necessarily known. The response describes the corresponding motion of the mass, usually in terms of its displacement (absolute or relative), pseudo-velocity (relative displacement multiplied by the SDOF-system undamped natural frequency), or absolute acceleration. A quantified representation (e.g.,

by plot, equation, or table) of the maximum selected response, as a function of frequency, is known as a shock response spectrum (SRS) [1,2,3,4]

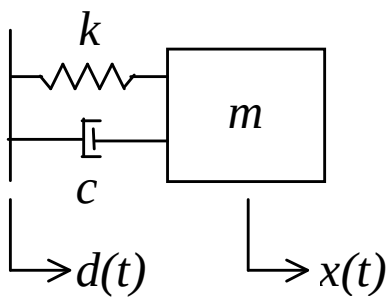

Figure 1. Hypothetical SDOF MSD system, for SRS determination

.

For a SDOF MSD system disturbed by a direct input $d(t)$ (at *D*, Fig. 2), comprising a linear combination of ν exponentially decaying sinusoids all beginning at time zero, the displacement response $x(t)$ has a relatively simple analytical form [5]. In particular, $x(t)$ comprises a linear combination of $\nu+1$ exponentially decaying, phase-shifted sinusoids, at the forcing frequencies and at the damped natural frequency for the hypothetical SDOF MSD system. Like the direct-input sinusoids, the response sinusoids all begin at time zero. The input disturbance can be described as "local" (since it is applied locally, at *D*), and can be regarded as a filtered, or induced, input due to a remote shock (e.g., at *R*, Fig. 2). It has been shown [6,7] that, for a linear, constant-parameter, Rayleigh-damped system having ν degrees of freedom (νDOFs), the local input $d(t)$ will have this simple form, provided the remote shock input is an ideal impulse (i.e., a Dirac-delta function).

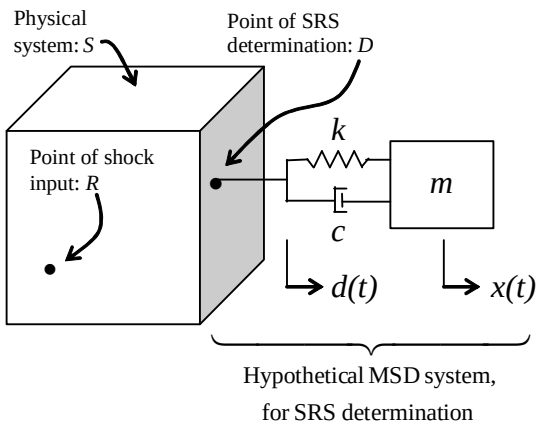

Figure 2. Shock-loaded system *S*, with (hypothetical) attached MSD system for SRS determination

Accordingly, the relative-displacement response of the MSD system has a simple analytical form, consisting of a linear combination of $v+1$ damped sinusoids, which can be used straightforwardly to determine Pseudovelocity Shock Response Spectra.
In the present paper analytical expressions will be found describing corresponding kinematic functions for the more general case when the damping matrix C of the vDOF system is not restricted to Rayleigh damping. It will be shown that the relative displacement $x-d$ will still have the form of $v+1$ exponentially decaying sinusoids, with parameters determinable analytically from the vDOF system's eigenstructure and the parameters of the attached SDOF MSD system. A state-space formulation of the original system will be used to produce this result.

3 Problem Statement

Consider a linear, stable, damped physical system (represented pictorially by S in Fig. 2), with v degrees of freedom (v-DOFs), having constant mass, damping, and stiffness matrices represented, respectively, by M, C, and K. For forcing vector $\underline{f}$ and disturbance input matrix E, the 2nd-order matrix differential equation of motion can be expressed by

$$M\,\underline{\ddot{x}} + C\underline{\dot{x}} + K\underline{x} = E\,\underline{f}\ , \tag{1}$$

where $\underline{x}$, $\underline{\dot{x}}$, and $\underline{\ddot{x}}$ are vectors representing the generalized physical coordinates, velocities, and accelerations, respectively. Assume initial conditions $\underline{x}(0)$ and $\underline{\dot{x}}(0)$. Assume also the equations to be arranged such that the ith coordinate x_i is the scalar response d of S, at point D (Fig. 2), to input scalar disturbance f_k applied at point R, with all other elements of input vector $\underline{f}$ set at zero. The scalar response of the attached SDOF MSD system to this input is x (Fig. 2). Assume further that mass m is infinitesimally small, so that the motion of m will not affect that of D. (I.e., there will be no output feedback, or output impedance, to S).

The objectives of this paper are to determine analytical expressions for the absolute displacements $d(t)$ and $x(t)$, and for relative displacement

$$\delta = x - d\ , \tag{2}$$

for a shock input $f_k(t)$ consisting of an ideal impulse. Note that the shock input is "remote," in that points R and D are not coincident. The displacement d is both a response of S at D and a local, "induced" input to the attached SDOF MSD system; it is a "filtered" input, consisting of the shock input f_k filtered through the eigensystem representing S.

4 Solution

4.1 State Space Representation of Basic System

Upon defining state variables

$$\underline{z}_1 = \underline{x} \tag{3}$$

and

$$\underline{z}_2 = \dot{\underline{z}}_1 = \dot{\underline{x}}\,, \tag{4}$$

(1) can be represented in the following state-space form:

$$\underbrace{\begin{Bmatrix} \dot{\underline{z}}_1 \\ \dot{\underline{z}}_2 \end{Bmatrix}}_{\dot{\hat{\underline{z}}}} = \underbrace{\begin{bmatrix} O & I \\ -M^{-1}K & -M^{-1}C \end{bmatrix}}_{A_1} \underbrace{\begin{Bmatrix} \underline{z}_1 \\ \underline{z}_2 \end{Bmatrix}}_{\hat{\underline{z}}} + \underbrace{\begin{bmatrix} O \\ M^{-1}E \end{bmatrix}}_{E_1} \underline{f}\,, \tag{5}$$

where O and I represent $v \times v$ zero- and identity matrices, respectively. As indicated above by (5),

$$\hat{\underline{z}} = \begin{Bmatrix} \underline{z}_1 \\ \underline{z}_2 \end{Bmatrix}, \tag{6}$$

$$A_1 = \begin{bmatrix} O & I \\ -M^{-1}K & -M^{-1}C \end{bmatrix}, \tag{7}$$

and

$$E_1 = \begin{bmatrix} O \\ M^{-1}E \end{bmatrix}; \tag{8}$$

so that the state equations have simple form

$$\dot{\hat{\underline{z}}} = A_1 \hat{\underline{z}} + E_1 \underline{f}\,. \tag{9}$$

4.2 Response of Basic System to General Vector Input

In terms of the matrix exponential $\exp(A_1 t)$ and initial conditions $\hat{\underline{z}}_0$, application of Laplace transforms leads straightforwardly to the following well-known solution to (9):

$$\hat{\underline{z}} = \exp\left(A_1 t\right) \hat{\underline{z}}_0 + \exp\left(A_1 t\right) * E_1 \underline{f}\,, \tag{10}$$

where the asterisk refers to the convolution integral. Accordingly, the state vector has general solution

$$\underline{x} = \underline{z}_1 = \begin{bmatrix} I & O \end{bmatrix} \underline{\hat{z}} = \begin{bmatrix} I & O \end{bmatrix} \left\{ \exp\left(A_1 t\right) \underline{\hat{z}}_0 + \exp\left(A_1 t\right) * E_1 \underline{f} \right\} . \tag{11}$$

4.3 Response of Basic System to General Scalar Input

Suppose now that input vector $\underline{f}$, of length m, is nonzero only in the kth element, for some physically meaningful value of k. That is,

$$\underline{f} = \left[0, \cdots 0, f_k(t), 0, \cdots, 0\right]^T , \tag{12}$$

with the possibility that k could indicate any element, including first or last. Upon expanding the disturbance input matrix as

$$E_1 = \left[\underline{\hat{e}}_1, \underline{\hat{e}}_2, \cdots, \underline{\hat{e}}_m\right] , \tag{13}$$

(11) reduces to

$$\underline{x} = \begin{bmatrix} I & O \end{bmatrix} \left\{ \exp\left(A_1 t\right) \underline{\hat{z}}(0) + \exp\left(A_1 t\right) * \underline{\hat{e}}_k f_k \right\} . \tag{14}$$

State matrix A_1 can be expressed in terms of its Jordan canonical form J_1 as follows:

$$A_1 = X_1 J_1 X_1^{-1}, \tag{15}$$

where matrix X_1 is a generalized eigenvector matrix of A_1. In particular,

$$X_1 = \left[\underline{x}_1^c, \underline{x}_2^c, \cdots, \underline{x}_{2\nu}^c\right] , \tag{16}$$

where

$$A_1 \underline{x}_i^c = \lambda_i \underline{x}_i^c \tag{17}$$

depicts the eigenvector equation for the ith eigenvalue, eigenvector pair $\left(\lambda_i, \underline{x}_i^c\right)$.

Assume for simplicity that the similarity transformation represented by (15) diagonalizes A_1 fully to eigenvalue matix Λ:

$$J_1 = \Lambda = \begin{bmatrix} \lambda_1 & & \\ & \ddots & \\ & & \lambda_{2\nu} \end{bmatrix} , \tag{18}$$

with all eigenvalues distinct (nonrepeated). Then (14) can be expressed in terms of the system eigenstructure:

$$\underline{x} = \begin{bmatrix} I & O \end{bmatrix} \left\{ X_1 \exp\left(\Lambda t\right) X_1^{-1} \underline{\hat{z}}(0) + X_1 \exp\left(\Lambda t\right) X_1^{-1} * \underline{\hat{e}}_k \, f_k \right\} \tag{19}$$

Assume further, again for simplicity:

(1) that all system modes are underdamped (so that the λ's will all occur in complex conjugate pairs);

(2) that the eigenvalues are arranged by conjugate pairs such that for $\lambda_i = -\varsigma_i \omega_{ni} + j\omega_{di}$ $\left(j = \sqrt{-1}\right)$ the next eigenvalue is $\lambda_{i+1} = -\varsigma_i \omega_{ni} - j\omega_{di}$; and

(3) that these pairs are arranged in the order of increasing real parts, such that, for indices *i* and *j*, if $-\varsigma_i \omega_{ni} < -\varsigma_j \omega_{nj}$ then $i < j$.

In particular, then, for our νDOF system, the $2\nu \times 2\nu$ eigenvalue matrix is

$$J_1 = \Lambda = \begin{bmatrix} \lambda_1 & & \\ & \ddots & \\ & & \lambda_{2\nu} \end{bmatrix} = \begin{bmatrix} -\varsigma_1\omega_{n1} + j\omega_{d1} & & & & \\ & -\varsigma_1\omega_{n1} - j\omega_{d1} & & & \\ & & \ddots & & \\ & & & -\varsigma_\nu\omega_{n\nu} + j\omega_{d\nu} & \\ & & & & -\varsigma_\nu\omega_{n\nu} - j\omega_{d\nu} \end{bmatrix}, \tag{20}$$

for which the matrix exponential of (20) is

$$\exp\left(\Lambda t\right) = \begin{bmatrix} e^{\lambda_1 t} & & & & \\ & e^{\lambda_2 t} & & & \\ & & \ddots & & \\ & & & e^{\lambda_{2\nu-1} t} & \\ & & & & e^{\lambda_{2\nu} t} \end{bmatrix} = \begin{bmatrix} e^{\left(-\varsigma_1\omega_{n1} + j\omega_{d1}\right)t} & & & & \\ & e^{\left(-\varsigma_1\omega_{n1} - j\omega_{d1}\right)t} & & & \\ & & \ddots & & \\ & & & e^{\left(-\varsigma_\nu\omega_{n\nu} + j\omega_{d\nu}\right)t} & \\ & & & & e^{\left(-\varsigma_\nu\omega_{n\nu} - j\omega_{d\nu}\right)t} \end{bmatrix}. \tag{21}$$

Delineate the inverse of the eigenvector matrix by

$$Y_1 \coloneqq X_1^{-1}, \tag{22}$$

and expand this matrix in terms of its row vectors $\underline{y}_i^r$:

$$Y_1 = \begin{bmatrix} \underline{y}_1^r \\ \underline{y}_2^r \\ \vdots \\ \underline{y}_{2\nu}^r \end{bmatrix}, \tag{23}$$

(19) can now be expressed, using (16) and (21) through (23), in the following form:

$$\underline{x} = \begin{bmatrix} I & O \end{bmatrix} \sum_{i=1}^{2\nu} \underbrace{\left\langle \left(\underline{y}_i^r \, \underline{\hat{z}}_0 \right) e^{\lambda_i t} + \left(\underline{y}_i^r \, \underline{\hat{e}}_k \right) \left(e^{\lambda_i t} * f_k \right) \right\rangle}_{\text{scalar function}} \underline{x}_i^c \ . \tag{24}$$

Define the following scalars:

$$\alpha_i = \underline{y}_i^r \, \underline{\hat{z}}_0, \tag{25}$$

and

$$\beta_i = \underline{y}_i^r \, \underline{\hat{e}}_k . \tag{26}$$

Then (24) becomes

$$\underline{x} = \sum_{i=1}^{2\nu} \left\langle \alpha_i \, e^{\lambda_i t} + \beta_i \left(e^{\lambda_i t} * f_k \right) \right\rangle \underline{\breve{x}}_i^c , \tag{27}$$

where

$$\underline{\breve{x}}_i^c = \begin{bmatrix} I & O \end{bmatrix} \underline{x}_i^c \tag{28}$$

is the upper $\nu \times 1$ partition of $\underline{x}_i^c$.

Since the eigenvalues occur in complex conjugate pairs, (27) can be re-expressed as follows:

$$\underline{x} = \sum_{i=1}^{\nu} \Big\langle \Big[\alpha_{2i-1} \, e^{\left(-\varsigma_1 \omega_{n1} + j\omega_{d1}\right)t} + \alpha_{2i} \, e^{\left(-\varsigma_i \omega_{ni} - j\omega_{di}\right)t} \Big] + \Big[\beta_{2i-1} \, e^{\left(-\varsigma_i \omega_{ni} + j\omega_{di}\right)t} + \beta_{2i} \, e^{\left(-\varsigma_i \omega_{ni} + j\omega_{di}\right)t} \Big] * f_k \Big\rangle \underline{\breve{x}}_i^c . \tag{29}$$

(29) reduces to the trigonometric form:

$$\underline{x} = \sum_{i=1}^{\nu} \Big\langle e^{-\varsigma_i \omega_{ni} t} \left(\tilde{\alpha}_{i1} \cos\omega_{di} t + \tilde{\alpha}_{i2} \sin\omega_{di} t \right) + e^{-\varsigma_i \omega_{ni} t} \left(\tilde{\beta}_{i1} \cos\omega_{di} t + \tilde{\beta}_{i2} \sin\omega_{di} t \right) * f_k \Big\rangle \underline{\breve{x}}_i^c , \tag{30}$$

where

$$\tilde{\alpha}_{i1} = \alpha_{2i-1} + \alpha_{2i} = 2\,\mathrm{Re}\,\alpha_{2i-1} = 2\,\mathrm{Re}\,\alpha_{2i} , \tag{31}$$

$$\tilde{\alpha}_{i2} = j\left(\alpha_{2i-1} - \alpha_{2i} \right) = -2\,\mathrm{Im}\,\alpha_{2i-1} = -2\,\mathrm{Im}\,\alpha_{2i} , \tag{32}$$

$$\tilde{\beta}_{i1} = \beta_{2i-1} + \beta_{2i} = 2\,\mathrm{Re}\,\beta_{2i-1} = 2\,\mathrm{Re}\,\beta_{2i}, \tag{33}$$

and

$$\tilde{\beta}_{i2} = j\left(\beta_{2i-1} - \beta_{2i}\right) = -2\,\mathrm{Im}\,\beta_{2i-1} = -2\,\mathrm{Im}\,\beta_{2i}. \tag{34}$$

Finally, in phase-shifted trigonometric form,

$$\underline{x} = \sum_{i=1}^{\nu} \left\langle d_{i1}\, e^{-\varsigma_i \omega_{ni} t} \sin\left(\omega_{di} t + \phi_{i1}\right) + d_{i2}\, e^{-\varsigma_i \omega_{ni} t} \sin\left(\omega_{di} t + \phi_{i2}\right) * f_k \right\rangle \breve{\underline{x}}_i^c, \tag{35}$$

where

$$d_{i1} = \sqrt{\tilde{\alpha}_{i1}^2 + \tilde{\alpha}_{i2}^2} = 2\left|\alpha_{2i-1}\right| = 2\left|\alpha_{2i}\right|, \tag{36}$$

$$\varsigma_i = \tan^{-1}\left(\frac{\mathrm{Im}\,\lambda_{2i-1}}{-\mathrm{Re}\,\lambda_{2i-1}}\right) = \tan^{-1}\left(\frac{-\mathrm{Im}\,\lambda_{2i}}{-\mathrm{Re}\,\lambda_{2i}}\right), \tag{37}$$

$$\omega_{ni} = \left|\lambda_{2i-1}\right| = \left|\lambda_{2i}\right|, \tag{38}$$

$$\omega_{di} = \mathrm{Im}\,\lambda_{2i-1} = \mathrm{Im}\,\lambda_{2i}, \tag{39}$$

$$\phi_{i1} = \tan^{-1}\left(\frac{\tilde{\alpha}_{i1}}{\tilde{\alpha}_{i2}}\right) = \tan^{-1}\left(\frac{\mathrm{Re}\,\alpha_{2i-1}}{-\mathrm{Im}\,\alpha_{2i-1}}\right) = \tan^{-1}\left(\frac{\mathrm{Re}\,\alpha_{2i}}{\mathrm{Im}\,\alpha_{2i}}\right), \tag{40}$$

$$d_{i2} = \sqrt{\tilde{\beta}_i^2 + \tilde{\beta}_{i+1}^2} = 2\left|\beta_{2i-1}\right| = 2\left|\beta_{2i}\right|, \tag{41}$$

and

$$\phi_{i2} = \tan^{-1}\left(\frac{\tilde{\beta}_{i1}}{\tilde{\beta}_{i2}}\right) = \tan^{-1}\left(\frac{\mathrm{Re}\,\beta_{2i-1}}{-\mathrm{Im}\,\beta_{2i-1}}\right) = \tan^{-1}\left(\frac{\mathrm{Re}\,\beta_{2i}}{\mathrm{Im}\,\beta_{2i}}\right). \tag{42}$$

Note from (25), (26), and (36) through (42) that (35) expresses the basic system response in terms of easily evaluated algebraic functions of the basic system eigenstructure, the initial conditions, and the disturbance-input matrix.

4.4 Response of Basic System to Single Ideal-Impulse Input

Consider now the case in which the shock input is an ideal impulse of strength γ:

$$f_k = \gamma\, u_0(t). \tag{43}$$

For this situation, the basic system response of (35) reduces readily to

$$\underline{x} = \sum_{i=1}^{v} e^{-\varsigma_i \omega_{ni} t} \left\langle d_{i1} \sin\left(\omega_{di} t + \phi_{i1}\right) + \gamma\, d_{i2} \sin\left(\omega_{di} t + \phi_{i2}\right) \right\rangle \breve{\underline{x}}_i^c \,. \tag{44}$$

With zero initial conditions, the response reduces further to

$$\underline{x} = \sum_{i=1}^{v} \gamma\, d_{i2}\, e^{-\varsigma_i \omega_{ni} t} \sin\left(\omega_{di} t + \phi_{i2}\right) \breve{\underline{x}}_i^c \,. \tag{45}$$

Note that each element of the response in (44) or (45) is a linear combination of damped sinusoids. In particular, if the displacement $d(t)$ at the SDOF MSD attachment point is the jth element x_j of $\underline{x}$, then designating the jth element of $\breve{\underline{x}}_i^c$ by $\breve{x}_{ij}^c$ one obtains from (45) the following scalar equation for the local, or "induced" shock input for SRS calculations:

$$d(t) = x_j = \sum_{i=1}^{v} \tilde{d}_{i2}\, e^{-\varsigma_i \omega_{ni} t} \sin\left(\omega_{di} t + \phi_{i2}\right) , \tag{46}$$

where

$$\tilde{d}_{i2} = \gamma\, d_{i2} \breve{x}_{ij}^c \,. \tag{47}$$

4.5 Displacement of Attached Mass

The attached-mass response $x(t)$ to induced input $d(t)$ has been shown [5] (using Laplace transforms) to be

$$\begin{aligned} x(t) = {} & e^{-\varsigma \omega_n t}\left(A \cos \omega_d t + B \sin \omega_d t\right) \\ & + \tilde{C}\left[e^{-\varsigma \omega_n t} \sin\left(\omega_d t + \phi\right)\right] * d(t), \end{aligned} \tag{48}$$

where

$$\omega_d = \omega_n \sqrt{1 - \varsigma^2} \,, \tag{49}$$

$$A = x(0+), \tag{50}$$

$$B = \frac{\varsigma \omega_n}{\omega_d} x(0+) + \frac{1}{\omega_d} \dot{x}(0+) - \frac{2\varsigma \omega_n}{\omega_d} d(0+), \tag{51}$$

$$\tilde{C} = \frac{\omega_n^2}{\omega_d}, \tag{52}$$

and
$$\phi = \tan^{-1}\left(\frac{2\varsigma\sqrt{1-\varsigma^2}}{1-2\varsigma^2}\right). \tag{53}$$

Note that, whereas parameters ς_i, ω_{ni}, and ω_{di} pertain to the physical system S (Fig. 2), parameters ς, ω_n, and ω_d describe the attached (conceptual) SDOF system.

Upon substituting from (46) into (48), and using the results of [5], mass m is found to have the following response to the input of (43):

$$\begin{aligned} x(t) = \Big\langle & e^{-\varsigma\omega_n t}\left(A\cos\omega_d t + B\sin\omega_d t\right) \\ & + \tilde{C}\sum_{i=1}^{n}\tilde{d}_{i2}\Big\{e^{-\varsigma\omega_n t}\left[-\delta_{1i}\sin\left(\omega_d t + \phi + \phi_{i2} + \theta_{1i}\right) + \delta_{2i}\sin\left(\omega_d t + \phi - \phi_{i2} + \theta_{2i}\right)\right] \\ & \quad + e^{-\varsigma_i\omega_{ni} t}\left[\delta_{1i}\sin\left(\omega_{di} t + \phi + \phi_{i2} + \theta_{1i}\right) - \delta_{2i}\sin\left(\omega_{di} t - \phi + \phi_{i2} + \theta_{3i}\right)\right]\Big\}\Big\rangle u_{-1}(t), \end{aligned} \tag{54}$$

where
$$\delta_{1i} = \frac{1}{2\sqrt{\mu_i^2 + \nu_i^2}}, \tag{55}$$

$$\delta_{2i} = \frac{1}{2\sqrt{\mu_i^2 + \rho_i^2}}, \tag{56}$$

$$\theta_{1i} = \tan^{-1}\left(\frac{\mu_i}{\nu_i}\right), \tag{57}$$

$$\theta_{2i} = \tan^{-1}\left(\frac{\mu_i}{\rho_i}\right), \tag{58}$$

and
$$\theta_{3i} = \tan^{-1}\left(\frac{\mu_i}{-\rho_i}\right), \tag{59}$$

for
$$\mu_i = -\varsigma_i\omega_{ni} - \varsigma\omega_n, \tag{60}$$

$$\nu_i = \omega_d - \omega_{di}, \tag{61}$$

and
$$\rho_i = \omega_d + \omega_{di}. \tag{62}$$

The other variables are as defined previously.

4.6 Relative Displacement $\delta(t)$

Subtracting (46) from (54), one obtains an expression for the relative displacement:

$$\begin{aligned}\delta(t) = x(t) - d(t) \; &= \Big\langle e^{-\varsigma\omega_n t}\left(A\cos\,\omega_d t + B\sin\,\omega_d t\right) \\ &+ \tilde{C}\sum_{i=1}^{v}\tilde{d}_{i2}\Big\{e^{-\varsigma\omega_n t}\left[-\delta_{1i}\sin\left(\omega_d t + \phi + \phi_{i2} + \theta_{1i}\right) + \delta_{2i}\sin\left(\omega_d t + \phi - \phi_{i2} + \theta_{2i}\right)\right] \\ &\quad + e^{-\varsigma_i\omega_{ni}t}\Big[\delta_{1i}\sin\left(\omega_{di}t + \phi + \phi_{i2} + \theta_{1i}\right) - \delta_{2i}\sin\left(\omega_{di}t - \phi + \phi_{i2} + \theta_{3i}\right), \\ &\quad - \sin\left(\omega_{di}t + \phi_{i2}\right)/\tilde{C}\Big]\Big\}\Big\rangle\; u_{-1}(t),\end{aligned} \tag{63}$$

Using trigonometric addition formulas, one can reduce (63) to the following simple form [7]:

$$\delta(t) = e^{-\varsigma\omega_n t}\left(W_1\cos\omega_d t + W_2\sin\omega_d t\right) + \sum_{i=1}^{v} e^{-\varsigma_i\omega_{ni}t}\left(W_{1i}\cos\omega_{di}t + W_{2i}\sin\omega_{di}t\right)\,, \tag{64}$$

for

$$W_1 = A - \tilde{C}\sum_{i=1}^{v}\tilde{d}_{i2}\left[\delta_{1i}\sin\left(\phi + \phi_{i2} + \theta_{1i}\right) - \delta_{2i}\sin\left(\phi - \phi_{i2} + \theta_{2i}\right)\right], \tag{65}$$

$$W_2 = B - \tilde{C}\sum_{i=1}^{v}\tilde{d}_{i2}\left[\delta_{1i}\cos\left(\phi + \phi_{i2} + \theta_{1i}\right) - \delta_{2i}\cos\left(\phi - \phi_{i2} + \theta_{2i}\right)\right], \tag{66}$$

$$W_{1i} = \tilde{d}_{i2}\left[\tilde{C}\delta_{1i}\sin\left(\phi + \phi_{i2} + \theta_{1i}\right) - \tilde{C}\delta_{2i}\sin\left(\phi - \phi_{i2} + \theta_{3i}\right) - \sin\phi_{i2}\right]\,, \tag{67}$$

and

$$W_{2i} = \tilde{d}_{i2}\left[\tilde{C}\delta_{1i}\cos\left(\phi + \phi_{i2} + \theta_{1i}\right) - \tilde{C}\delta_{2i}\cos\left(-\phi + \phi_{i2} + \theta_{3i}\right) - \cos\phi_{i2}\right]\,; \tag{68}$$

This simplifies readily to

$$\delta(t) = V e^{-\varsigma\omega_n t}\sin\left(\omega_d t + \Phi\right) + \sum_{i=1}^{n} V_i\, e^{-\varsigma_i\omega_{ni}t}\sin\left(\omega_{di}t + \Phi_i\right)\,, \tag{69}$$

where

$$V = \sqrt{W_1^2 + W_2^2}\,, \tag{70}$$

$$\Phi = \tan^{-1}\left(W_1 / W_2\right), \tag{71}$$

$$V_i = \sqrt{W_{1i}^2 + W_{2i}^2}\,, \tag{72}$$

and $$\Phi_i = \tan^{-1}\left(W_{1i} / W_{2i}\right). \tag{73}$$

Note that (69) expresses the relative-displacement response in terms of easily evaluated algebraic functions of the basic system eigenstructure, the initial conditions, and the disturbance-input matrix.

5 Conclusion

Many stable physical systems can be represented as v-degree-of-freedom systems of linear time-invariant equations in state-space form, using constant mass, damping, stiffness, and disturbance-input matrices. For such systems the various kinematic quantities required for determining Shock Response Spectra have historically been found using the composite modal structure of the physical system and an attached conceptual system (a single-degree-of-freedom, zero-impedance, mass-spring-damper system). Using this method, each time the attachment point changes, a new computation of the modal structure is required, since the underlying composite system changes as well. For the case of Rayleigh damping, recent efforts reported simple analytical equations for the pertinent kinematic quantities, assuming various approximate forms of remote point-shock impulsive disturbances (ideal impulse, rectangular pulse, and sawtooth). These equations result from performing two consecutive convolutions analytically, viz., from shock input to the response of a remote point on the physical system, and from this remote-point response (that is, of the attachment point) to the response of the attached system. For the special case of an ideal impulse it was shown that, with only a single determination of the physical system's modal structure, the kinematic quantities could be expressed analytically—for any shock-input point, and any attachment point—as a linear combination of v+1 exponentially decaying sinusoids. The modal structure of the physical system need be determined only once. The present paper has used state-space formulation of the equations of motion to accomplish the same task, for the more general case of a system having damping that is not proportional.

6 Acknowledgments

The authors are grateful to the Mathematical Sciences Center of Excellence, U.S. Military Academy, for partial funding of this work.

7 References

[1] Harris, Cyril M., and Piersol, Allan G., editors, *Harris' Shock and Vibration Handbook, Fifth Edition*, McGraw-Hill, NY, 2002, chap. 23, pp. 1-26.

[2] Gaberson, H. A., and Pal, D., "Shock Spectrum Classification of Violent Environments that Cause Machinery Failure," *Proceedings of the 18th International Modal Analysis Conference*, Feb. 2000, pp. 1126-1135.

[3] Smallwood, David O., "The Shock Response Spectrum at Low Frequencies," Shock and Vibration Bulletin, N. 56, Part 1, Aug. 1986, pp. 279-288.

[4] Gaberson, H. A., and Chalmers, Richard H., "Reasons for Representing Shock Spectra with Velocity as the Ordinate," *Proceedings of the 66th Shock and Vibration Symposium*, 1995, pp. 181-191.

[5] Hampton, R. David, Wiedenman, Nathan S., and Li, Ting H., "Analytical Determination of Shock Response Spectra, for an Impulse-Loaded Proportionally Damped System," ESDA 2004-58024, *Proceedings of the 7th Biennial Conference on Engineering Systems and Design Analysis*, July 2004. Also published with minor revision as "Quasi-Analytical Determination of Shock Response Spectra, for an Impulse-Loaded Proportionally Damped System," U-086, *Proceedings of the 75th Shock and Vibration Symposium*, October 2004. Submitted February 2005 to the *Journal of Shock and Vibration.*

[6] Hampton, R. David, Kip P. Nygren, and Li, Ting H., "Quasi-Analytical Shock Response Spectra, for Proportionally Damped Systems, with Remote Shock Loading," U-087, *Proceedings of the 75th Shock and Vibration Symposium*, October 2004.

[7] Hampton, R. David, Kip P. Nygren, and Li, Ting H., "Modal Expressions for Relative Displacements Underlying Pseudovelocity Shock-response Spectra, for Idealized Remote Shock Loadings: Derivation and Verification." Submitted June 2005 to the *Journal of Shock and Vibration.*