Project 1 – MA205 **Objective Gold** **Due 15 Oct 1998**

Authors: MAJ Cochran, MAJ Matheson D/MATH
MAJ Samek, CPT Pedersen D/C&ME

Introduction

You are a scout platoon leader tasked with the mission of conducting a point reconnaissance of a bridge across a small river in enemy territory. Your mission is critical and will answer one of your commander's priority intelligence requirements, "Will the bridge at grid NZ45651234 fail under the weight of a 30 ton truck?" You name your reconnaissance objective, OBJECTIVE GOLD, complete the troop leading procedures and cross your line of departure.

Mission One: Reconnaissance of Objective Gold (Structural Analysis with Vectors)

Upon arriving at your objective you observe that the bridge is a simple truss bridge.

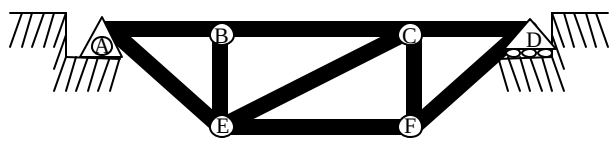

The members of the truss are aluminum alloy I-Beams with the following cross sectional dimensions: b = 63 mm, d = 76mm, w = 8.9 mm and t = 6.6 mm. The density of the aluminum alloy is 2710 kg/m^3 and the moment of inertia I_x about the neutral axis is:

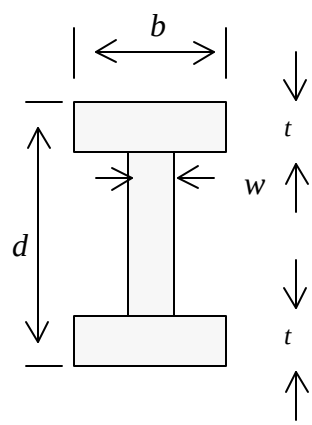

$$I_x = 1.22 \times 10^6 \cdot mm^4$$

The modulus of elasticity (E) for the alloy is 70×10^9 pascals (Pa). [Pa = N/m^2].

The task force engineer officer has told you that the members of the truss BC, EF, and EC are the critical members. Each of the members is either in tension or compression. A member is in tension if the forces acting on it tend to lengthen it. A member is in compression if the forces on it tend to shorten it. For those members in tension, he is concerned that a normal stress in excess of 10×10^7 (Pa) will stretch the members to failure.

Use the relationship $s = \frac{P}{A}$ (where A is the cross sectional area of the I-Beam and σ is the normal stress) to determine the load P which will cause a member in tension to fail.

For those members in compression, he is concerned that an axial load in excess of the critical load P_{cr} will cause the member to fail by buckling.

Use the relationship $P_{cr} = \dfrac{p^2 \cdot EI_x}{L^2}$ (where E is the modulus of elasticity, L is the length of the beam, and I_x is the moment of inertia of the beam) to determine the critical load which will cause a member in compression to fail.

The task force engineer believes the most likely time for failure of the bridge will occur when the front axle load is directly over joint C and the rear axle load is directly over joint B. He tells you to ignore the weight of the truss members since they are capable of supporting a much greater load than their weight.

The dimensions of the bridge are $l_1 = l_3 =$ _____, $l_2 =$ _____, and $h =$ _____. The forces acting on the bridge are of magnitude $F_1 =$ _____ and $F_2 =$ _____ and are directed as indicated.

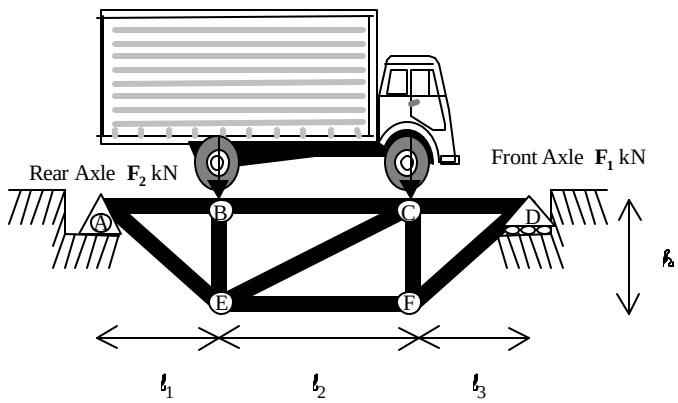

The truss bridge described above is a rigid-body in equilibrium. Rigid-body equilibrium requires both the sum of the forces and the sum of the moments to be zero, $\sum \vec{F} = \vec{0}$ and $\sum \vec{M} = \vec{0}$. These two equations will be referred to as the equilibrium equations.

Note: The moment of a force $\vec{F}$ about a point P can be found by $\vec{M} = \vec{r} \times \vec{F}$ where $\vec{r}$ is the position vector from the point P to any point on the line of action of the force $\vec{F}$.

While analyzing the truss bridge above, assume the truss members are joined by smooth pins, and all forces are applied at the joints. These assumptions allow us to assume the forces acting at the ends of a truss member are directed along the axis of the member.

If we only need to find the forces acting in a few of the members of a truss we can use the method of sections to find these forces. The first step in the method of sections is to determine the truss's external reactions. (The forces supporting the bridge at points A and D). Next, 'cut' the truss into two parts to determine the forces on the cut members. To guarantee a solvable system of equations, make the cut through no more than three members with unknown forces. Then draw a free body diagram for the resulting pieces of the bridge. It is important to note the forces in the unknown members are equal and opposite in direction. Initially, you can assume the direction of the force along the axis of the unknown members in the free body diagram. The solution to the equilibrium equations will indicate the correct direction. A negative answer indicates the assumed direction was incorrect.

Use vectors to calculate the forces acting on the truss members BC, EF and EC. Are these members under tension or compression? Using the values you found earlier, determine if these truss members will fail if the bridge is loaded as shown above.

<u>Mission Two: A Simply Supported Beam Bridge</u>

The task force commander decides that he will not risk using the bridge. Instead he wishes to build a bridge consisting of two simply supported parallel beams spanned by planks. He is concerned that the maximum deflection of the beams will exceed $L/360$ meters where $L = l_1 + l_2 + l_3$. To ease our calculations we will assume that the weight of the truck is directed at a single point, $a =$ _____ . You will use white oak as the material for the beams. Your supplier has rectangular beams in sizes 2 x 4, 4 x 4, 6 x 8, 8 x 8, 10 x 15 and 20 x 20. (All sizes are given in inches.) You must decide on the best size beam to use.

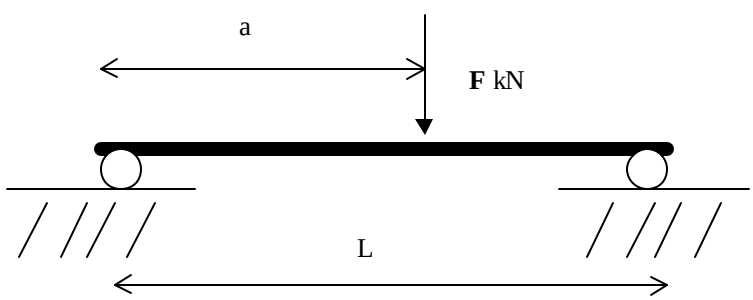

The task force engineer tells you that you can find the deflection of a simply supported beam by solving the second order linear differential equation: $\frac{d^2y}{dx^2} = \frac{M(x)}{E \cdot I}$ where $y(x)$ is the deflection in the beam at point x, E is the modulus of elasticity of the beam material, and I is the moment of inertia of your beam with respect to the neutral axis. The modulus of elasticity for white oak is 12×10^9 Pa. Furthermore, the moment of inertia for a rectangular beam is

$I_x = \frac{1}{12} \cdot b \cdot h^3$ where b is the width of the base of the beam and h is the height of the beam.
The function $M(x)$ is the bending moment function for the beam and for our situation is:

$$M(x) = \frac{F(L-a)}{L} \cdot x, \qquad 0 \le x < a$$
$$M(x) = \frac{Fa(L-x)}{L}, \qquad a \le x \le L$$

When solving the differential equation for the deflection of the beam, we must use the following boundary conditions. Note that the deflection on the ends must be zero, and the deflection and the slope of the deflection must be equal on the left and right side of any point on the beam.

$$y(0) = 0,\ y(a-) = y(a+),\ y'(a-) = y'(a+),\ and\ \ y(L) = 0\ \ .$$

Calculate the maximum deflection for each beam. Graph the deflection curve for each beam. Determine the point of maximum deflection for each beam. Which of the available beams meet your commander's specifications? Which beam should you choose? Why?