MA206 Project #2 (MST ILAP) 350 Points **Fall 2000**
Authors: MAJ Day (Math) and MAJ Schmoyer (EECS) **Issued: Lesson 29**
Due: Lesson 35, 23 – 24 Nov 1999

***Each member* of your group is expected to contribute up to four hours towards the completion of this project. These four hours come from the advance lesson for lesson 31 (2 hours), the advance lesson for lesson 32 (1 hour), and the advance lesson for lesson 35 (1 hour).**

GENERAL:

1. The project will be worked in groups of three or four as determined by your instructor.
2. For project format, follow the guidance given in the Project Writing Guide. This guide is available on the MA206 home page at http://www-internal.dean.usma.edu/math/CORE/ma206/ by clicking on the "Projects" link and then on the appropriate document links.
3. Follow the Dean's policy on reporting numerical answers. This policy is also available on the MA206 home page. Click on "Significant Digits Memorandum" under the "Admin" link to access this.
4. Whenever technology is used, include a printout or an appropriate reference.
5. **This project is due at the beginning of class on lesson 35, 23 – 24 November 1999.**
6. **This is a graded homework assignment. You are required to document any assistance that you received in accordance with *Documentation of Written Work*, August 1999.**

SITUATION (Continued from the Reliability Problem Set):

You are still the company Fire Support Officer (FSO) for a light infantry company. The company successfully completed its recent mission by destroying the enemy motorized infantry battalion within its engagement area. The timely and successful execution of Priority Target Red contributed greatly to the unit's mission accomplishment. The priority target did not go off without a hitch, however. There were numerous problems with the Call for Fire subtask (Figure 1). The FIST DMD lost power 2 hours before the attack, leaving you with only voice transmission capability. When you initiated the call for fire by voice, it took three transmissions to successfully submit the call for fire to the MLRS platoon. Consequently, because of the delay, the effects on target were not as desired.

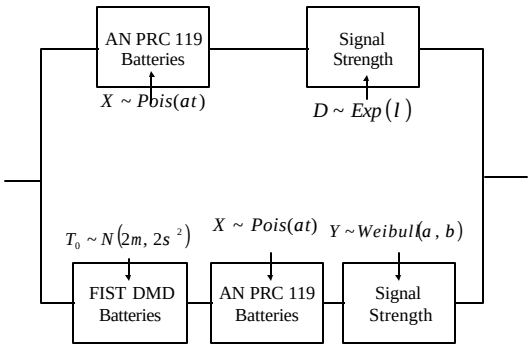

Figure 1. Call for Fire Subtask

During a lull in combat operations, you decide to conduct a thorough investigation of the reliabilities for the Call for Fire subtask components. You find out that many of the component reliabilities are based on claims made by the manufacturers. Some of the claims are not supported by statistical analyses. Your approach is to question every assumption and piece of information provided by the manufacturers. You intend to verify every distribution and its associated parameter(s). Also, you intend to check the feasibility of any independence assumptions. Once you have verified the claims or rejected them by finding a more plausible claim, you intend to replicate the subsystem through computer simulation. You hope that this simulation will add validity to your statistical analysis.

Part I – In Progress Review (50 Points). Conduct an IPR with your instructor during Lesson 31 (10, 12 Nov 99). Be prepared to brief your analysis plan. Include specific tools that you intend to use to verify distributional assumptions and parameter values. Plan on 8 – 10 minutes for the IPR. Your instructor will provide you with specifics on the time and content of your briefing.

Part II – Call For Fire Subtask Reliability (50 Points). Compute the overall reliability of the subtask assuming the manufacturers' claims are true. These claims are:

a) The AN-PRC 119 batteries fail according to a Poisson Process with rate **__(a)__** failures per hour. You have two spare batteries per radio. The batteries must last for 48 hours.

b) The distance a voice transmission travels (in kilometers) is exponentially distributed with parameter **__(b)__**. The signal must travel at least **__(c)__** kilometers to reach the MLRS platoon.

c) The lifetime of a single FIST DMD battery (in hours) follows a normal distribution with mean **__(d)__** and variance **__(e)__**. The two batteries on hand are assumed to be independent.

d) The distance a digital signal travels (in kilometers) is distributed according to a Weibull distribution with parameters $a = 0.5$ and $b =$ **__(f)__**. The signal must travel at least **__(c)__** kilometers to reach the MLRS platoon. The value of a is known to be correct.

Part III – Statistical Analysis (150 Points). There exists data to act as evidence in your quest to support or refute the manufacturers' claims. This data can be reached through the MA206 Home Page. Select the "Projects" link and then the "Get Data" link. This will take you to a web page that lists the four populations from which to sample. When prompted to enter an ID number, use the ID # for the cadet in your project group whose last name comes first alphabetically. Because these data come from different sources, the available sample size varies for each population. Specifics about the data:

a) Radio Battery Failure Times. These values represent time to failure for BA-5590s (radio batteries), in hours. The sample size is $n = 35$.

b) Voice Transmission Distance. These represent the maximum distance (in km) at which numerous voice transmissions were received. The sample size is $n = 40$.

c) FIST DMD Battery Failure Times. These values represent time to failure for FIST DMD batteries, in hours. The sample size is $n = 20$.

d) Digital Transmission Distance. These represent the maximum distance (in km) at which numerous digital transmissions were received. The sample size is $n = 32$.

Part IV – Model Verification (100 Points). Once you have completed the statistical analysis for each component of the Call for Fire subtask, you can verify the overall system reliability through computer simulation. MINITAB provides the tools necessary to simulate data from numerous types of distributions. For example, to simulate data that models a random variable that is distributed uniformally on the interval [10, 20], complete the following steps in MINITAB:

1. Click Calc > Random Data > Uniform

2. Generate **1000** rows of data
3. Store in column(s): **C1**
4. Lower endpoint: **10**
5. Upper endpoint: **20**
6. Enter **OK**

The procedures are similar for any common distribution. Just enter the appropriate parameter(s) wherever required. If you found insufficient reason to reject the manufacturers' claims about certain parameters, use those values in the simulation. If you found sufficient cause to reject the manufacturers' claims, use the corresponding estimate from your sample instead.

Once you have generated data to replicate occurrences for each system component, you can code these values as a Success (1) or Failure (0) using the MINITAB Code command (Manip > Code > Numeric to Numeric...). For example, if you generate Poisson data to replicate the number of radio battery failures in a 48-hour period, a random value of 2 or less would correspond to having radio power for the entire period (a component success). A random value of 3 or more would correspond to having too many radio battery failures within the 48-hour period (a component failure).

After coding the component outcomes, you should have 5 columns each containing 1000 values that are all zeros and ones. Consider the proportion of the trials for each component that are successful. How do the experimental component reliabilities compare to the reliabilities you computed based on the manufacturers' claims in Part II? Now consider a row to be a single trial of the entire system. By using the component codes in that row, you can determine whether the system is an overall success (1) or failure (0). Determine the proportion of the trials that are successful. How does this value compare to the theoretical system reliability that you determined in Part II? Is it plausible that the theoretical reliability for the system is correct? Consider Section 8.3 of Devore before answering this question.